CLCi

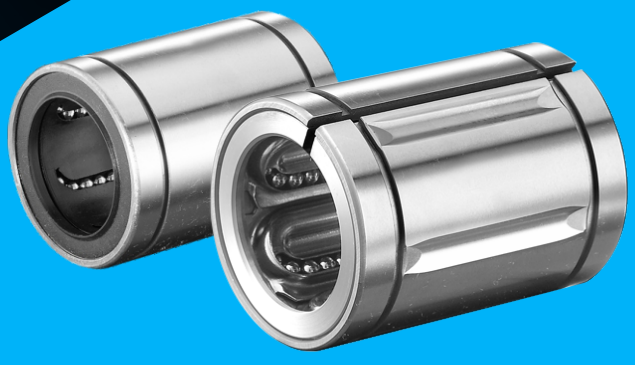

# LINEAR BALL BEARINGS

BRITISH VIRGIN ISLAND
CLCi LIMITED CORP.

# 公司與產品簡介

## CLCi 與聯誠軸承

CLCi 品牌來自英國，其下軸承種類齊全，品質精良、穩定並行銷於世界各地，深獲使用者的好評。聯誠軸承公司代理經銷軸承業務近40年，目前為CLCi 品牌的台灣唯一總代理。聯誠軸承為您推薦品質優良的CLCi 軸承，希望透過合理的價格，與您攜手共創事業高峰。

## 直線球軸承

直線球軸承是一種利用內部滾珠運動轉換為直線運動的元件，可以提供機器設備低摩擦且順暢的直線運動，廣泛使用於各種產業機械如食品機械、半導體製造設備、機器人設備等。直線球軸承的結構包含外筒、內部滾珠及用為架設滾珠的保持器。直線球軸承因應用途可分為標準型(外筒完整)、調整型(外筒具插槽)及開放型(外筒具缺口)，還有圓形或方形法蘭型(FLANGE)。其中標準型是最廣泛的應用類型；調整型則可以用為軸與座之間的間隙調整；開放型用於支撐軸以避免偏轉。

## CLCi 直線球軸承特點

- 外筒表面以冷壓成型及熱處理加工形成獨特的球形凹槽，藉此，可以防止因力矩和預載所引起的早期故障，並使軸承結構緊緻、輕巧，而有利於機器的設計。
- 內部滾珠採無限循環(無限行程)及低摩擦力設計，且摩擦力幾乎不會隨負載增加而變大，而能使用於重負載環境。因此，具有使用壽命長及節能的效果。
- 滾珠之保持器以鋼材或樹脂製成，其中採鋼製保持器的軸承，在無密封蓋狀況下可耐150°C左右的溫度。
- CLCi 的直線球軸承彼此可以互換，具有偏心小、定心容易的優點。
- 一般應用情況，CLCi 的直線球軸承只需簡單潤滑或無需潤滑。因此具有低維護的優點。

## LINEAR BALL BUSHING

SDM P.7
SDE P.9

SDM–AJ P.7
SDE–AJ P.9

SDM–OP P.7
SDE–OP P.9

LB P.11
LBE P.13

LB–AJ P.11
LBE–AJ P.13

LB–OP P.11
LBE–OP P.13

LM P.15
LME P.17
LMB P.19

LM–AJ P.15
LME–AJ P.17
LMB–AJ P.19

LM–OP P.15
LME–OP P.17
LMB–OP P.19

LM–L P.21
LME–L P.22
LMB–L P.23

KH P.24

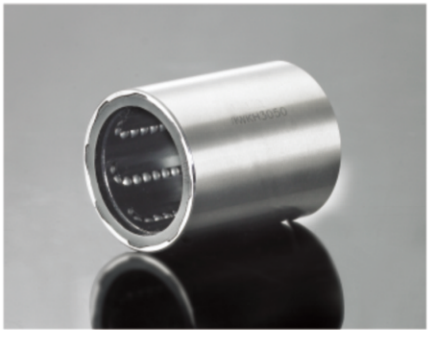

WKH P.25

## SUPER LINEAR BALL BUSHING

LMES P.27
LMBS P.29

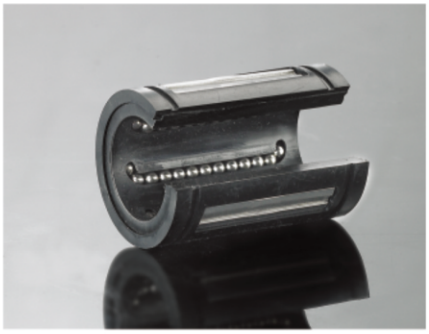

LMES–OP P.28
LMBS–OP P.30

ST P.31
ST–B P.31

## FLANGED TYPE LINEAR BALL BUSHING

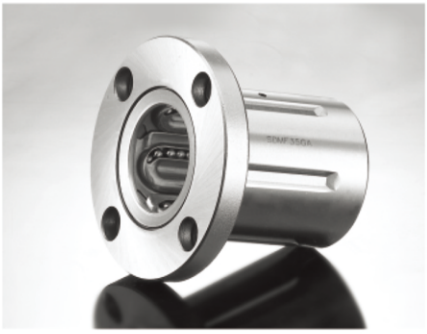

SDMF P.35
SDEF P.39

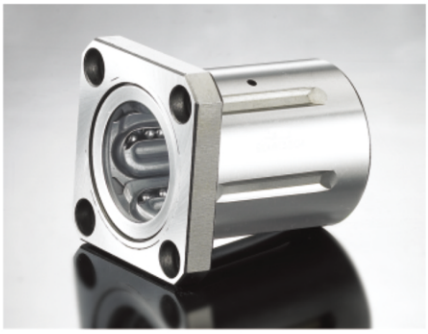

SDMK P.35
SDEK P.39

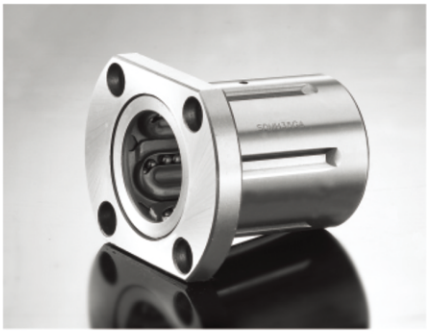

SDMH P.37

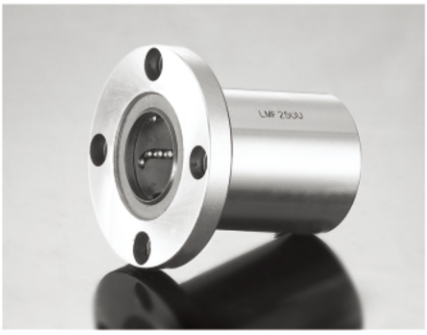

LMF P.41
LMEF P.49
LMBF P.53

LMK P.41
LMEK P.49
LMBK P.53

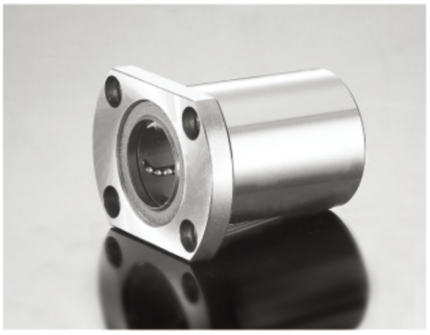

LMH P.43

LMF–L P.45
LMEF–L P.51

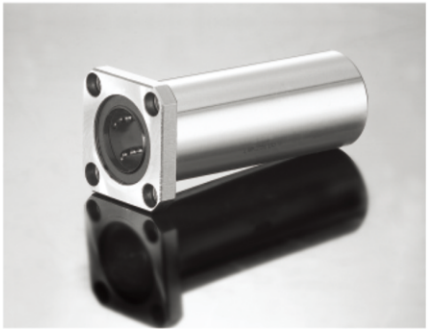

LMK–L P.45
LMEK–L P.51

LMH–L P.47

## FLANGED SLIDE BUSHING

LMFP P.55

LMKP P.55

LMHP P.57

LMFP–L P.59

LMKP–L P.59

LMHP–L P.61

LMFC P.63
LMEFC P.67
LMBFC P.69

LMKC P.63
LMEKC P.67
LMBKC P.69

LMHC P.65

## LINEAR BALL BUSHING CASE UNIT

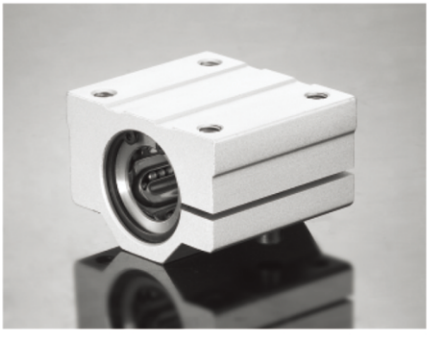

SMA–AJ P.72

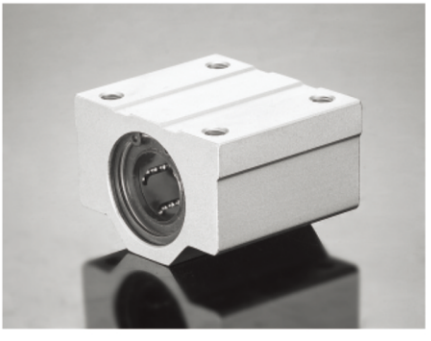

SMA P.73
KBA P.75

SMA–L P.73
KBA–L P.75

## LINEAR BALL BUSHING CASE UNIT

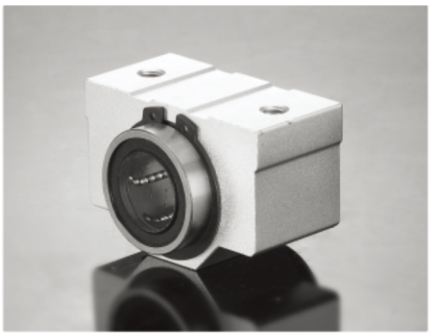

SMA–S P.73
KBA–S P.75

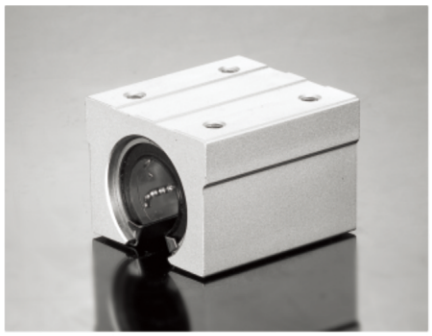

SME P.77
KBE P.79

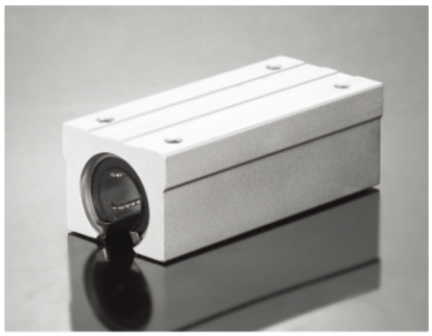

SME–L P.78

## SHAFT SUPPORT

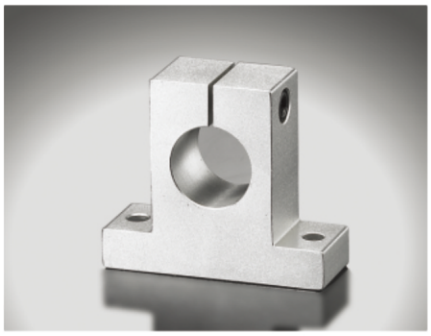

SH P.80

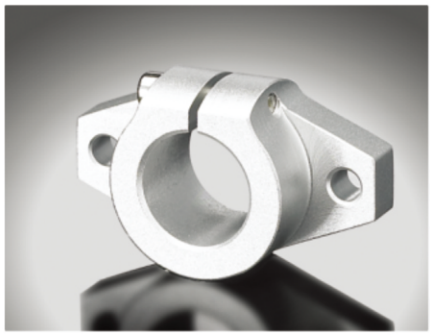

SHF P.81

## BOLT WHEEL NEEDLE

KR P.26

## SUPPORT RAIL UNIT

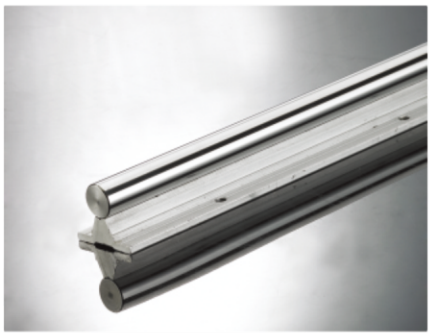

SBR P.82

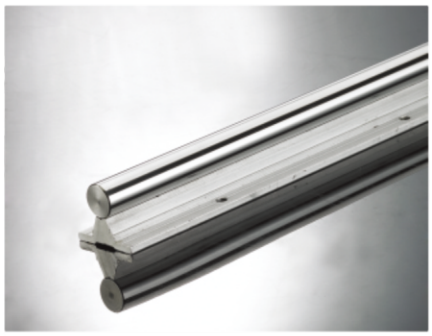

TBS P.83

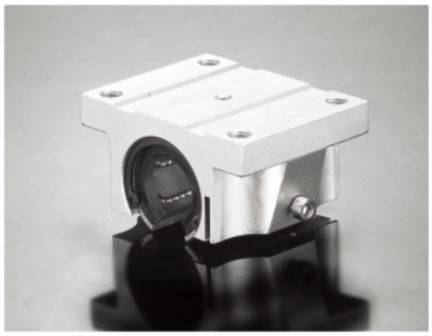

TBR P.84

TBR–S P.84

## FINE SHAFT

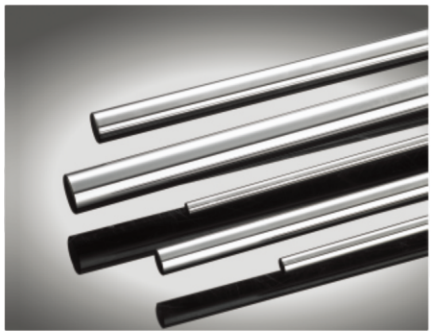

SF P.85

## BALL SCREW

SFU P.87
DFU P.88

## 1. Features

The **CLCi** linear ball bearings are high precision bearings manufactured with its own technology and have the following features.

1. The **CLCi** linear ball bearing has the outer race that is processed by cold press forming to shape the ball tracks. This gives features to its appearance, too.

2. The cold press forming has enabled lightweight structure of the bearing. This eventually provides compact and lightweight machine design.

3. The balls circulate endlessly. This structure provides unlimited stroke with minimal frictional resistance that ensures long service life and energy saving.

4. The frictional resistance remains almost unchanged, even when the load increases. Therefore, heavy load is acceptable depending on application conditions.

5. Because of the cold press forming for the outer race, an early failure caused by moment load and excessive pre-load can be prevented.

6. The **CLCi** linear ball bearing is heat treated in such a method as to suit to the outer race that is cold press formed.

7. The **CLCi** linear ball bearing with steel retainer is resistant against high temperature and applicable up to 150℃ when it is without seals. Please consult **CLCi** on use outside the recommended temperature range.

8. The **CLCi** linear ball bearing is interchangeable. The eccentricity is small and centering is easy. It can operate with simple lubrication or without any lubrication, depending on applications. Thus maintenance is almost free.

## 2. Structure

As illustrated below, the **CLCi** linear ball bearing is consisted of an outer race, retainer, balls and end rings. The retainer is incorporated inside the outer race, and has three or more rows of elliptical ball tracks that allow unlimited ball circulation and the balls circulate very smoothly in those ball tracks.

The retainer is held by two end rings at both ends of the outer race. One side of the paralleled straight portions of the elliptical ball track is cut off open, and the balls there are in contact with the shaft surface to circulate to and fro unlimitedly in the ball track according to the rectilinear reciprocation of the shaft. Thus the retainer forms rolling tracks, and at the same time keeps the balls from failing out when the bearing is removed from the shaft.

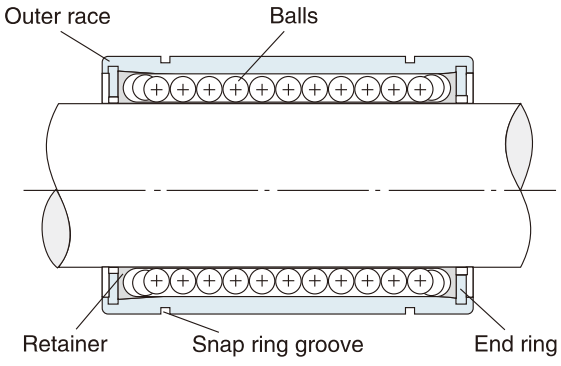


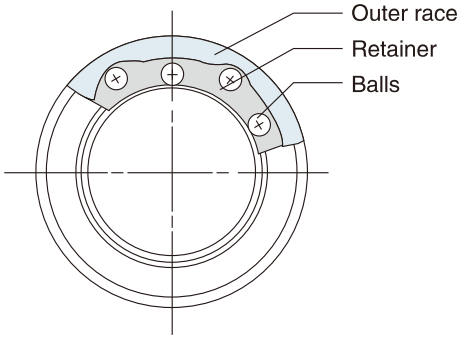


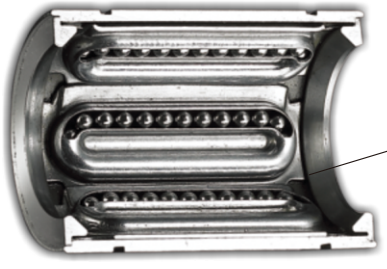

The Balls Here Carry Load.

Steel retainer type
SDM-GA

Resin retainer type
LM--UU

## 3. Load Rating and Life

The rating life of a linear ball bearing is the total travelling distance which the linear system can reach without material failure caused by rolling fatigue on either of the outer race, balls or the shaft, when they reciprocate with continuous stress. The basic dynamic load rating is the load with which linear ball bearings can run for a distance of 50km without damage caused by rolling fatigue.

Following are the relation between life and the basic dynamic load rating of a linear ball bearing.

$$L = 50\left(\frac{1}{f_L}\right)^3 \qquad (1)$$

$$f_L = \frac{P}{C} \qquad (2)$$

L =Rating life (km)
$f_L$=Life factor (See Table 1)
P =Radial load applied on bearing (N)
C =Basic dynamic load rating of bearing (N)
(See Dimension Table)

The hardness of the shaft surface is closely related with the running performance of the bearing, and the Life factor can be obtained from the equation (3) with the Hardness factor as per Table 2, when the hardness of the shaft surface is under HRC60.

$$f_L = \frac{P}{f_H \cdot C} \qquad (3)$$

Following equations are converted from the equation (3) and the Hardness factor (See Table 2).

$$C = \frac{P}{f_L \cdot f_H} \qquad (4)$$

$$P = f_L \cdot f_H \cdot C \qquad (5)$$

$$f_H = \frac{P}{f_L \cdot C} \qquad (6)$$

With those equations, necessary operating conditions can be obtained. While the life obtained from those equations guarantees the function of the combined system of the bearing and the shaft, it does not indicate each service life individually.

When $f_H$=1, the shaft wears almost equally as the bearing. When the $f_H$ value is smaller, the life of the shaft gets shorter. If the life of the shaft is shorter than that of the bearing, when or just before the shaft fails due to fatigue, turn the shaft a little to shift the ball paths so that the balls run on the new tracks of the shaft surface, and the life of the shaft can be lengthened.

Table 1

| | Life factor ($f_L$) | Rating life (km) | Life factor ($f_L$) |
|---|---|---|---|
| 50 | 1.00 | 700 | 0.41 |
| 60 | 0.94 | 800 | 0.40 |
| 70 | 0.89 | 900 | 0.38 |
| 80 | 0.86 | 1000 | 0.37 |
| 90 | 0.82 | 1250 | 0.34 |
| 100 | 0.79 | 1500 | 0.32 |
| 110 | 0.77 | 2000 | 0.29 |
| 120 | 0.75 | 3000 | 0.26 |
| 130 | 0.73 | 4000 | 0.23 |
| 140 | 0.71 | 5000 | 0.22 |
| 150 | 0.69 | 6000 | 0.20 |
| 160 | 0.68 | 7000 | 0.19 |
| 170 | 0.66 | 8000 | 0.18 |
| 180 | 0.65 | 10000 | 0.17 |
| 190 | 0.64 | 12500 | 0.16 |
| 200 | 0.63 | 15000 | 0.15 |
| 250 | 0.58 | 20000 | 0.14 |
| 300 | 0.55 | 30000 | 0.12 |
| 400 | 0.50 | 40000 | 0.11 |
| 500 | 0.46 | 50000 | 0.10 |
| 600 | 0.44 | | |

Table 2

| Shaft Hardness (HRC) | Hardness factor ($f_H$) |
|---|---|
| 60 | 1.00 |
| 59 | 0.97 |
| 57 | 0.88 |
| 55 | 0.76 |
| 53 | 0.64 |
| 51 | 0.52 |
| 49 | 0.43 |
| 47 | 0.35 |
| 45 | 0.29 |
| 43 | 0.25 |
| 41 | 0.21 |
| 39 | 0.18 |
| 37 | 0.16 |
| 35 | 0.14 |
| 30 | 0.10 |
| 25 | 0.07 |
| 20 | 0.05 |

### Sample calculations

Example 1

Obtaining the life of the bearing under the following conditions:

Bearing: SDM25 (C=1130N)

Load on bearing: P=215N

(The load is supposed to be on top of one ball track. )

Hardness of shaft surface: HRC51

From Table 2, $f_H$=0.52

From equation (3), $f_L = \frac{215}{0.52 \times 1130} = 0.37$

From Table 1, the life in distance for fL=0.37 is 1000km

The life of the bearing itself in this case is as follows from equation (2): $f_L = \frac{215}{1130} = 0.19$

From Table 1, the life is 7000km ( $f_L$=0.19)

Therefore, if the shaft is turned a little to shift the ball paths on the shaft surface, the life 1000km can be lengthened.

Example 2

Selecting the linear ball bearing to satisfy the following conditions:

Load on bearing: 100N

(The load is supposed to be on top of one ball track. )

Hardness of shaft surface: HRC57

Stroke length: 40 mm

Number of strokes per minute: 50 cpm

Lifespan to be required: 200 hours

The travelling distance within 2000 hours is calculated as below:

$40\text{mm} \times (2 \times 50\text{cpm}) \times 60\text{min} \times 2000\text{h} \times 10^{-6} = 480\text{km}$

From Table 1, $f_L$=0.47 for the travelling distance of 480km.

From Table 2, $f_H$=0.88 for the hardness HRC57, These as well as the load P=100N are calculated in equation (4) as follows:

$$C = \frac{100}{0.47 \times 0.88} = 242\text{N}$$

From the dimension table, it is found that the bearing SDM10 has the value of C=259N which is more than the above C=242N. Therefore, SDM10 is selected as the linear ball bearing which satisfies the given conditions.

The life of the shaft and the bearing is calculated as follows.

Bearing:

From equation (2): $f_L = \frac{100}{259} = 0.38$

From Table 1; $f_L$=0.38 → 900km → 3,750 hrs

Shaft:

From equation (3): $f_L = \frac{100}{0.88 \times 259} = 0.44$

From Table 1; $f_L$=0.44 → 600km → 2,500 hrs

Example 3

Obtaining applicable load on the following conditions:

Bearing: SDM50 (C=4420N)

Hardness of shaft surface: HRC55

Life to be required: 100km

(The load is supposed to be on top of one ball track.)

From Table 1;

$f_L$=0.79 for the travelling distance of 100km

From Table 2;

$f_H$=0.76 for the hardness of shaft surface HRC55

From equation (5);

$P = f_L \times f_H \times C = 0.79 \times 0.76 \times 4420 = 2650\text{N}$

Therefore, the applicable load on the bearing is 2650N.

Example 4

Obtaining the necessary hardness of the shaft surface from the following conditions:

Bearing: SDM50 (C=4420N)

Load on bearing: P=490N

(The load is supposed to be on top of one ball track.)

Life to be required: 200km

From Table 1;

$f_L$=0.63 for the travelling distance of 200km

From equation (6);

$$f_H = \frac{P}{f_L \cdot C} = \frac{490}{0.63 \times 4420} = 0.17$$

Therefore, from Table 2, the necessary hardness for the shaft surface is HRC38.

## Relation between Ball Tracks and Load Rating

The load rating in the dimension table indicates the value when the load is placed on top of one ball track.

When the load is placed in the middle of ball tracks, the load rating will increase. The Table 3 shows the load ratio according to the loaded position.

Table 3

| Number of ball tracks | When the load is placed on top of the ball track ($Q_1$) | when the load is placed in the middle of ball tracks ($Q_2$) | Load ratio ($Q_2/Q_1$) |
|---|---|---|---|
| **4** | 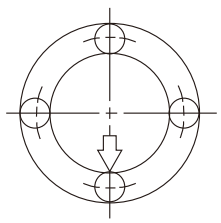 | 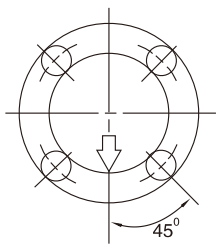  | **1.414** |
| **5** | 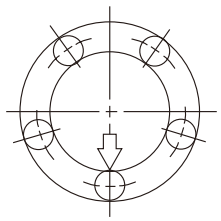 | 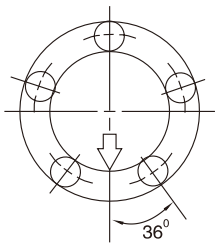  | **1.463** |
| **6** | 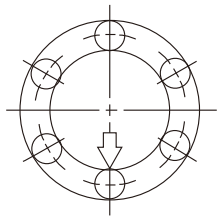 | 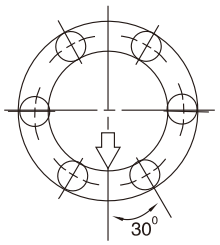  | **1.280** |

(Note) When the number of ball track is 3, $Q_2/Q_1$=1.

## 4. Clearance and Fit

When a standard-type **CLCi** slide bush is used with a shaft, inadequate clearance adjustment may cause early bush failure and/or poor, rough travelling. The clearance adjustable slide bush and open slide bush can be clearance adjusted when assembled in the housing which can control the outside cylinder housing which can control the outside cylinder diameter. However, too much clearance adjustment increases the deformation of the outside cylinder, to affect its precision and life. Therefore, the appropriate clearance between the bush and shaft, and clearance between the bush and housing are required according to the application. Table 4 shows recommended fit of the bush:

Table 4

| Model \ Division | | Shaft | | Housing | |
|---|---|---|---|---|---|
| | | Normal fit | Transitional fit | Loose fit | Tight fit |
| SDM、LM | High class | **g 6** | **h 6** | **H 7** | **J 7** |
| LMB | Precision class | **g 5** | **h 5** | **H 6** | **J 6** |
| SDE、LME | High class | **h 6** | **j 6** | **H 7** | **J 7** |

*Note: The clearance may be zero or negative. Please attention the movement.

## 5. Shaft and Housing

To optimize performance of the **CLCi** slide bush, high precision of the shaft and housing is required.

**1. Shaft**

The rolling balls in the **CLCi** slide bush are in point contact with the shaft surface. Therefore, the shaft dimensions, tolerance, surface finish, and hardness greatly affect the travelling performance of the bush. The shaft should be manufactured with due attention to the following points:

1) Since the surface finish critically affects smooth tolling of balls, grind the shaft at 1.5 S of better.

2) The best hardness of the shaft is HRC 60 to 64. Hardness less than HRC 60 decreases the life considerably, and hence reduces the permissible load. On the other hand, hardness over HRC 64 accelerates ball wear.

3) The shaft diameter for the clearance adjustable slide bush and open slide bush should as much as possible be of the lower value of the inscribed circle diameter in the specification table. Do not set the shaft diameter to the upper value.

4) Zero clearance or negative clearance increases the frictional resistance slightly. If the negative clearance is too tight, the deformation of the outside cylinder will become larger, to shorten the bush life.

The **CLCi** slide shaft is an ideal bush slide shaft manufactured in due consideration of dimensional tolerance, surface finish, and hardness. For details, refer to the section on slide shafts.

**2. Housing**

We provide a wide range of housings differing in design, machining, and mounting. For the fitness and shapes of housings, see Table 4 and the following section on mounting.

## 6. Mounting

When inserting the slide bush into the housing, do not hit the slide bush on the side ring holding the retainer but apply the cylinder circumference with a proper jig and push the slide bush into the housing by hand or lightly knock it in. (See Fig. 1. ) In inserting the shaft after mounting the bush, be careful not to shock the balls. Note that if two shafts are used in parallel, the parallelism is the most important factor to assure the smooth linear movement. Take care in setting the shafts.

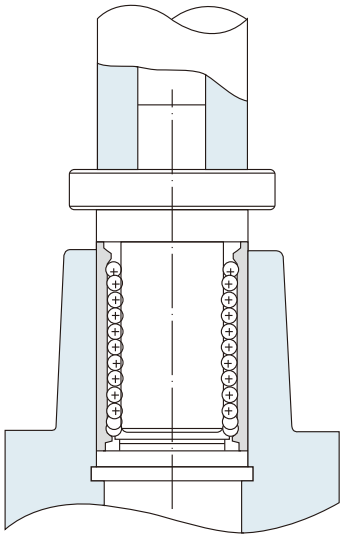

Fig. 1

## Examples of mounting

The popular way to mount a slide bush is to operate it with an appropriate interference. It is recommended, however, to make a loose fit in principle because otherwise precision is apt to be minimized.

The following examples (Figs. 2 to 6) show assembling of the inserted bush in terms of designing and mounting, for reference.

Fig. 2

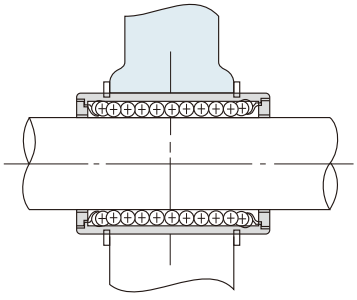

Fig. 3

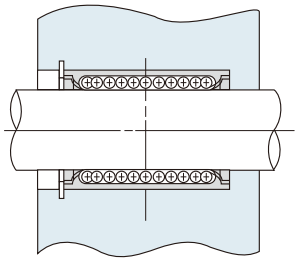

Fig. 4

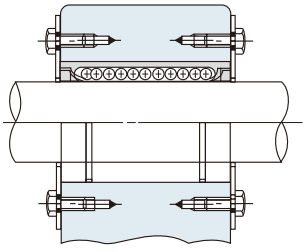

Fig. 5

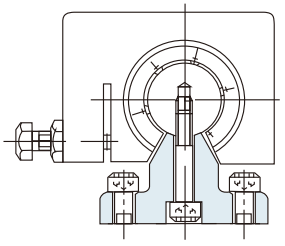

Fig. 6

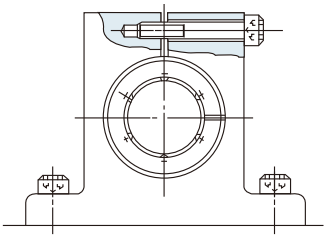

## 7. Types and Slide Bush No

SDM LM S F 25 L UU — AJ

• Type

| Nation Standard | |
|---|---|
| SDM | Universal Series |
| SDE | Special Series |

• Type

| | |
|---|---|
| LM | Metric dimension series most widely used in Japan |
| LME | Metric dimension series generally used in Europe |
| LMB | Inch dimension series used mainly in USA |

• Anticorrosion feafure

| Symbol | Specification |
|---|---|
| No entry | Steel |
| S | Stainless steel |

• Flange Shape

| Symbol | Specification |
|---|---|
| F | Round flange |
| K | Square flange |
| H | Two side cut flange |

• Modification

| Symbol | Specification |
|---|---|
| No entry | Standard type |
| AJ | Adjustable type |
| OP | Open type |

• Seal

| Symbol | Specification |
|---|---|
| No entry | No seal |
| U | Seal on one side |
| UU | Seals on both sides |

• Double type

| Symbol | Specification |
|---|---|
| No entry | Standard type |
| L | Lengthen type |

Nominal Shaft Diameter

# LINEAR BUSH SERIES

# SDM (Steel retainer)

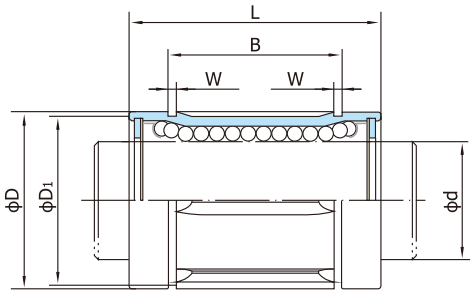


| Nominal shaft diameter (mm) | Part No. | | | | | | | | | | | |
|---|---|---|---|---|---|---|---|---|---|---|---|---|
| | SDM | | | SDM····-AJ | | | SDM····-OP | | | | dr | |
| | | Ball circuit | Weight (g) | | Ball circuit | Weight (g) | | Ball circuit | Weight (g) | mm | Tolerance ( $\mu$m) | |
| | | | | | | | | | | | Precision | High |
| **6** | **SDM 6GA** | 4 | 8.5 | **-** | - | - | **-** | - | - | 6 | 0<br>-6 | 0<br>-9 |
| **8** | **SDM 8SGA** | 4 | 11 | **-** | - | - | **-** | - | - | 8 | | |
| **8** | **SDM 8GA** | 4 | 17 | **-** | - | - | **-** | - | - | 8 | | |
| **10** | **SDM 10GA** | 4 | 36 | **-** | - | - | **-** | - | - | 10 | | |
| **12** | **SDM 12GA** | 4 | 42 | **SDM 12-AJ** | 4 | 41 | **SDM 12-OP** | 3 | 32 | 12 | | |
| **13** | **SDM 13GA** | 4 | 49 | **SDM 13-AJ** | 4 | 48 | **SDM 13-OP** | 3 | 37 | 13 | | |
| **16** | **SDM 16GA** | 4 | 76 | **SDM 16-AJ** | 4 | 75 | **SDM 16-OP** | 3 | 58 | 16 | | |
| **20** | **SDM 20GA** | 5 | 100 | **SDM 20-AJ** | 5 | 98 | **SDM 20-OP** | 4 | 79 | 20 | 0<br>-7 | 0<br>-10 |
| **25** | **SDM 25GA** | 6 | 240 | **SDM 25-AJ** | 6 | 237 | **SDM 25-OP** | 5 | 203 | 25 | | |
| **30** | **SDM 30GA** | 6 | 270 | **SDM 30-AJ** | 6 | 262 | **SDM 30-OP** | 5 | 228 | 30 | | |
| **35** | **SDM 35GA** | 6 | 425 | **SDM 35-AJ** | 6 | 420 | **SDM 35-OP** | 5 | 355 | 35 | 0<br>-8 | 0<br>-12 |
| **40** | **SDM 40GA** | 6 | 654 | **SDM 40-AJ** | 6 | 640 | **SDM 40-OP** | 5 | 546 | 40 | | |
| **50** | **SDM 50GA** | 6 | 1,700 | **SDM 50-AJ** | 6 | 1,680 | **SDM 50-OP** | 5 | 1,420 | 50 | | |
| **60** | **SDM 60GA** | 6 | 2,000 | **SDM 60-AJ** | 6 | 1,980 | **SDM 60-OP** | 5 | 1,650 | 60 | 0<br>-9 | 0<br>-15 |
| **80** | **SDM 80GA** | 6 | 4,520 | **SDM 80-AJ** | 6 | 4,400 | **SDM 80-OP** | 5 | 3,750 | 80 | | |
| **100** | **SDM 100GA** | 6 | 8,600 | **SDM 100-AJ** | 6 | 8,540 | **SDM 100-OP** | 5 | 7,200 | 100 | 0<br>-10 | 0<br>-20 |
| **120** | **SDM 120GA** | 8 | 15,000 | **SDM 120-AJ** | 8 | 14,900 | **SDM 120-OP** | 6 | 11,600 | 120 | | |
| **150** | **SDM 150GA** | 8 | 20,250 | **SDM 150-AJ** | 8 | 20,150 | **SDM 150-OP** | 6 | 15,700 | 150 | 0<br>-13 | 0<br>-25 |
| **180** | **SDM 180GA** | 8 | 33,945 | **SDM 180-AJ** | 8 | 33,795 | **SDM 180-OP** | 6 | 29,702 | 180 | 0<br>-19 | 0<br>-30 |
| **200** | **SDM 200GA** | 8 | 42,360 | **SDM 200-AJ** | 8 | 42,180 | **SDM 200-OP** | 6 | 37,065 | 200 | | |

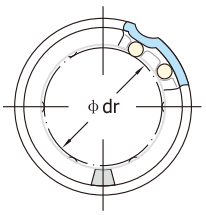


SDM-GA
Standard type

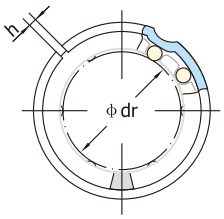


SDM-GA-AJ
Adjustable type

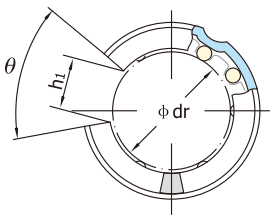


SDM-GA-OP
Open type

| Major dimensions and tolerance | | | | | | | | | | | Eccentricity | | Radial clearance (Max) μm | Basic load rating | | Nominal shaft diameter (mm) |
|---|---|---|---|---|---|---|---|---|---|---|---|---|---|---|---|---|
| D | | L | | B | | W | $D_1$ | h | $h_1$ | θ | | | | | | |
| mm | Tolerance (μm) | mm | Tolerance (μm) | mm | Tolerance (μm) | mm | mm | mm | mm | | Precision (μm) | High (μm) | | dynamic (C N) | static (Co N) | |
| 12 | 0 -11 | 19 | 0 -200 | 13.5 | 0 -200 | 1.1 | 11.5 | - | - | - | 8 | 12 | -3 | 206 | 265 | **6** |
| 15 | | 17 | | 11.5 | | 1.1 | 14.3 | - | - | - | | | | 176 | 216 | **8** |
| 15 | | 24 | | 17.5 | | 1.1 | 14.3 | - | - | - | | | | 274 | 392 | **8** |
| 19 | 0 -13 | 29 | | 22 | | 1.3 | 18 | - | - | - | | | -4 | 372 | 549 | **10** |
| 21 | | 30 | | 23 | | 1.3 | 20 | 1.5 | 8 | 80° | | | | 510 | 784 | **12** |
| 23 | | 32 | | 23 | | 1.3 | 22 | 1.5 | 9 | 80° | | | | 510 | 784 | **13** |
| 28 | | 37 | | 26.5 | | 1.6 | 27 | 1.5 | 11 | 80° | | | -6 | 774 | 1,180 | **16** |
| 32 | 0 -16 | 42 | | 30.5 | | 1.6 | 30.5 | 1.5 | 11 | 60° | 10 | 15 | | 882 | 1,370 | **20** |
| 40 | | 59 | 0 -300 | 41 | 0 -300 | 1.85 | 38 | 2 | 12 | 50° | | | | 980 | 1,570 | **25** |
| 45 | | 64 | | 44.5 | | 1.85 | 43 | 2.5 | 15 | 50° | | | -8 | 1,570 | 2,740 | **30** |
| 52 | 0 -19 | 70 | | 49.5 | | 2.1 | 49 | 2.5 | 17 | 50° | 12 | 20 | | 1,670 | 3,140 | **35** |
| 60 | | 80 | | 60.5 | | 2.1 | 57 | 3 | 20 | 50° | | | -10 | 2,160 | 4,020 | **40** |
| 80 | | 100 | | 74 | | 2.6 | 76.5 | 3 | 25 | 50° | | | -13 | 3,820 | 7,940 | **50** |
| 90 | 0 -22 | 110 | | 85 | | 3.15 | 86.5 | 3 | 30 | 50° | 17 | 25 | | 4,700 | 10,000 | **60** |
| 120 | | 140 | 0 -400 | 105.5 | 0 -400 | 4.15 | 116 | 3 | 40 | 50° | | | -20 | 7,350 | 16,000 | **80** |
| 150 | 0 -25 | 175 | | 125.5 | | 4.15 | 145 | 3 | 50 | 50° | 20 | 30 | | 14,100 | 34,800 | **100** |
| 180 | | 200 | | 158.6 | | 4.15 | 175 | 3 | 85 | 80° | | | -25 | 16,400 | 40,000 | **120** |
| 210 | 0 -29 | 240 | | 170.6 | | 5.15 | 204 | 3 | 105 | 80° | 25 | | | 21,100 | 54,300 | **150** |
| 260 | 0 -30 | 280 | | 210.6 | | 5.15 | 254 | 3 | 125 | 80° | 30 | 40 | -30 | 25,800 | 59,000 | **180** |
| 280 | | 320 | | 250.6 | | 5.15 | 274 | 3 | 140 | 80° | | | | 28,100 | 61,300 | **200** |

SI Unit 1N ≒ 0.102 kgf

# SDE (Steel retainer)

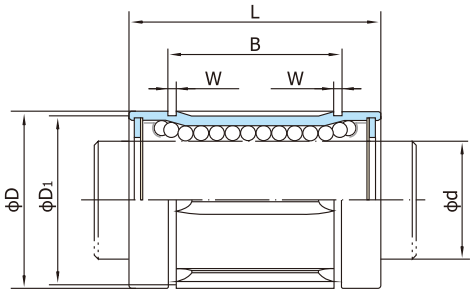


| Nominal shaft diameter (mm) | Part No. | | | | | | | | | | | |
|---|---|---|---|---|---|---|---|---|---|---|---|---|
| | SDE | Ball circuit | Weight (g) | SDE····-AJ | Ball circuit | Weight (g) | SDE····-OP | Ball circuit | Weight (g) | mm | dr Tolerance ( $\mu$m) Precision | dr Tolerance ( $\mu$m) High |
| **5** | **SDE 5GA** | 4 | 11 | **-** | - | - | **-** | - | - | 5 | - | +8<br>0 |
| **8** | **SDE 8GA** | 4 | 22 | **-** | - | - | **-** | - | - | 8 | | |
| **10** | **SDE 10GA** | 4 | 36 | **-** | - | - | **-** | - | - | 10 | | |
| **12** | **SDE 12GA** | 4 | 45 | **SDE 12-AJ** | 4 | 44 | **SDE 12-OP** | 3 | 35 | 12 | | |
| **16** | **SDE 16GA** | 4 | 60 | **SDE 16-AJ** | 4 | 59 | **SDE 16-OP** | 3 | 48 | 16 | - | +9<br>-1 |
| **20** | **SDE 20GA** | 5 | 102 | **SDE 20-AJ** | 5 | 100 | **SDE 20-OP** | 4 | 84 | 20 | | |
| **25** | **SDE 25GA** | 6 | 235 | **SDE 25-AJ** | 6 | 230 | **SDE 25-OP** | 5 | 195 | 25 | - | +11<br>-1 |
| **30** | **SDE 30GA** | 6 | 360 | **SDE 30-AJ** | 6 | 355 | **SDE 30-OP** | 5 | 309 | 30 | | |
| **40** | **SDE 40GA** | 6 | 770 | **SDE 40-AJ** | 6 | 758 | **SDE 40-OP** | 5 | 665 | 40 | - | +13<br>-2 |
| **50** | **SDE 50GA** | 6 | 1,250 | **SDE 50-AJ** | 6 | 1,230 | **SDE 50-OP** | 5 | 1,080 | 50 | | |
| **60** | **SDE 60GA** | 6 | 2,220 | **SDE 60-AJ** | 6 | 2,170 | **SDE 60-OP** | 5 | 1,900 | 60 | | |
| **80** | **SDE 80GA** | 6 | 5,140 | **SDE 80-AJ** | 6 | 5,000 | **SDE 80-OP** | 5 | 4,380 | 80 | - | +16<br>-4 |

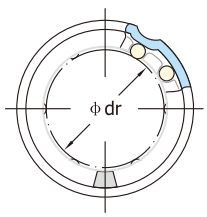


SDE-GA
Standard type

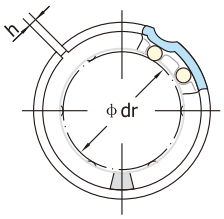


SDE-GA-AJ
Adjustable type

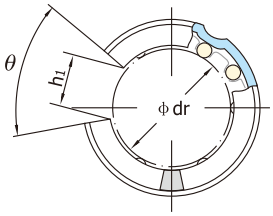


SDE-GA-OP
Open type

| Major dimensions and tolerance | | | | | | | | | | | Eccentricity (μm) | Radial clearance (Max) μm | Basic load rating | | Nominal shaft diameter (mm) |
|---|---|---|---|---|---|---|---|---|---|---|---|---|---|---|---|
| D | | L | | B | | W | $D_1$ | h | $h_1$ | θ | | | | | |
| mm | Tolerance (μm) | mm | Tolerance (μm) | mm | Tolerance (μm) | mm | mm | mm | mm | | | | dynamic (C N) | static (Co N) | |
| 12 | 0 -8 | 22 | 0 -200 | 14.5 | 0 -200 | 1.1 | 11.5 | - | - | - | 12 | -3 | 206 | 265 | **5** |
| 16 | | 25 | | 16.5 | | 1.1 | 15.2 | - | - | - | | | 265 | 402 | **8** |
| 19 | 0 -9 | 29 | | 22 | | 1.3 | 18 | - | - | - | | -4 | 372 | 549 | **10** |
| 22 | | 32 | | 22.9 | | 1.3 | 21 | 1.5 | 7.5 | 78° | | | 510 | 784 | **12** |
| 26 | | 36 | | 24.9 | | 1.3 | 24.9 | 1.5 | 10 | 78° | | | 578 | 892 | **16** |
| 32 | 0 -11 | 45 | | 31.5 | | 1.6 | 30.3 | 2 | 10 | 60° | 15 | -6 | 862 | 1,370 | **20** |
| 40 | | 58 | 0 -300 | 44.1 | 0 -300 | 1.85 | 37.5 | 2 | 12.5 | 60° | | | 980 | 1,570 | **25** |
| 47 | | 68 | | 52.1 | | 1.85 | 44.5 | 2 | 12.5 | 50° | | -8 | 1,570 | 2,740 | **30** |
| 62 | 0 -13 | 80 | | 60.6 | | 2.15 | 59 | 3 | 16.8 | 50° | 17 | | 2,160 | 4,020 | **40** |
| 75 | | 100 | | 77.6 | | 2.65 | 72 | 3 | 21 | 50° | | -13 | 3,820 | 7,940 | **50** |
| 90 | 0 -15 | 125 | 0 -400 | 101.7 | 0 -400 | 3.15 | 86.5 | 3 | 27.2 | 54° | 20 | | 4,700 | 9,800 | **60** |
| 120 | | 165 | | 133.7 | | 4.15 | 116 | 3 | 36.3 | 54° | | -20 | 7,350 | 16,000 | **80** |

SI Unit 1N ≒ 0.102 kgf

# LB (Resin retainer)

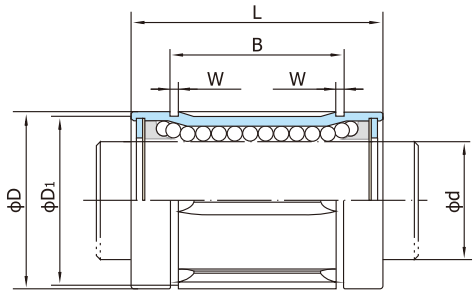


| Nominal shaft diameter (mm) | Part No. | | | | | | | | | | | |
|---|---|---|---|---|---|---|---|---|---|---|---|---|
| | LB | Ball circuit | Weight (g) | LB····AJ | Ball circuit | Weight (g) | LB····OP | Ball circuit | Weight (g) | mm | dr Tolerance ( $\mu$m) Precision | dr Tolerance ( $\mu$m) High |
| **6** | **LB 6** | 4 | 8.5 | - | - | - | - | - | - | 6 | 0 -6 | 0 -9 |
| **8** | **LB 8S** | 4 | 11 | - | - | - | - | - | - | 8 | | |
| **8** | **LB 8** | 4 | 17 | - | - | - | - | - | - | 8 | | |
| **10** | **LB 10** | 4 | 36 | - | - | - | - | - | - | 10 | | |
| **12** | **LB 12** | 4 | 42 | **LB 12-AJ** | 4 | 41 | **LB 12-OP** | 3 | 32 | 12 | | |
| **13** | **LB 13** | 4 | 49 | **LB 13-AJ** | 4 | 48 | **LB 13-OP** | 3 | 37 | 13 | | |
| **16** | **LB 16** | 4 | 76 | **LB 16-AJ** | 4 | 75 | **LB 16-OP** | 3 | 58 | 16 | | |
| **20** | **LB 20** | 5 | 100 | **LB 20-AJ** | 5 | 98 | **LB 20-OP** | 4 | 79 | 20 | 0 -7 | 0 -10 |
| **25** | **LB 25** | 6 | 240 | **LB 25-AJ** | 6 | 237 | **LB 25-OP** | 5 | 203 | 25 | | |
| **30** | **LB 30** | 6 | 270 | **LB 30-AJ** | 6 | 262 | **LB 30-OP** | 5 | 228 | 30 | | |
| **35** | **LB 35** | 6 | 425 | **LB 35-AJ** | 6 | 420 | **LB 35-OP** | 5 | 355 | 35 | 0 -8 | 0 -12 |
| **40** | **LB 40** | 6 | 654 | **LB 40-AJ** | 6 | 640 | **LB 40-OP** | 5 | 546 | 40 | | |
| **50** | **LB 50** | 6 | 1,700 | **LB 50-AJ** | 6 | 1,680 | **LB 50-OP** | 5 | 1,420 | 50 | | |
| **60** | **LB 60** | 6 | 2,000 | **LB 60-AJ** | 6 | 1,980 | **LB 60-OP** | 5 | 1,650 | 60 | 0 -9 | 0 -15 |
| **80** | **LB 80** | 6 | 4,520 | **LB 80-AJ** | 6 | 4,400 | **LB 80-OP** | 5 | 3,750 | 80 | | |
| **100** | **LB 100** | 6 | 8,600 | **LB 100-AJ** | 6 | 8,540 | **LB 100-OP** | 5 | 7,200 | 100 | 0 -10 | 0 -20 |
| **120** | **LB 120** | 8 | 15,000 | **LB 120-AJ** | 8 | 14,900 | **LB 120-OP** | 6 | 11,600 | 120 | | |
| **150** | **LB 150** | 8 | 20,250 | **LB 150-AJ** | 8 | 20,150 | **LB 150-OP** | 6 | 15,700 | 150 | 0 -13 | 0 -25 |
| **180** | **LB 180GA** | 8 | 33,945 | **LB 180-AJ** | 8 | 33,795 | **LB 180-OP** | 6 | 29,702 | 180 | 0 -19 | 0 -30 |
| **200** | **LB 200GA** | 8 | 42,360 | **LB 200-AJ** | 8 | 42,180 | **LB 200-OP** | 6 | 37,065 | 200 | | |

**Seal type:**

LB 12 2RS - AJ

| | |
|---|---|
| No entry | No seals |
| RS | Seal on one side |
| 2RS | Seals on both sides |

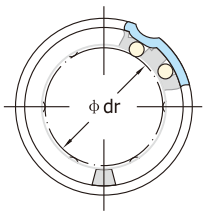


LB
Standard type

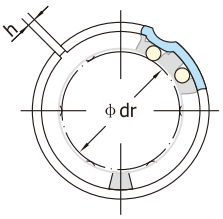


LB-AJ
Adjustable type

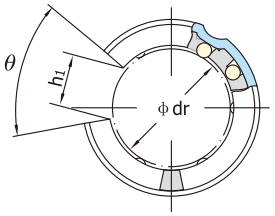


LB-OP
Open type

| Major dimensions and tolerance | | | | | | | | | | | Eccentricity | | Radial clearance (Max) μm | Basic load rating | | Nominal shaft diameter (mm) |
|---|---|---|---|---|---|---|---|---|---|---|---|---|---|---|---|---|
| D | | L | | B | | W mm | $D_1$ mm | h mm | $h_1$ mm | θ | | | | | | |
| mm | Tolerance (μm) | mm | Tolerance (μm) | mm | Tolerance (μm) | | | | | | Precision (μm) | High (μm) | | dynamic (C N) | static (Co N) | |
| 12 | 0 -11 | 19 | 0 -200 | 13.5 | 0 -200 | 1.1 | 11.5 | - | - | - | 8 | 12 | -3 | 206 | 265 | **6** |
| 15 | | 17 | | 11.5 | | 1.1 | 14.3 | - | - | - | | | | 176 | 216 | **8** |
| 15 | | 24 | | 17.5 | | 1.1 | 14.3 | - | - | - | | | | 274 | 392 | **8** |
| 19 | 0 -13 | 29 | | 22 | | 1.3 | 18 | - | - | - | | | -4 | 372 | 549 | **10** |
| 21 | | 30 | | 23 | | 1.3 | 20 | 1.5 | 8 | 80° | | | | 510 | 784 | **12** |
| 23 | | 32 | | 23 | | 1.3 | 22 | 1.5 | 9 | 80° | | | | 510 | 784 | **13** |
| 28 | | 37 | | 26.5 | | 1.6 | 27 | 1.5 | 11 | 80° | | | -6 | 774 | 1,180 | **16** |
| 32 | 0 -16 | 42 | | 30.5 | | 1.6 | 30.5 | 1.5 | 11 | 60° | 10 | 15 | | 882 | 1,370 | **20** |
| 40 | | 59 | 0 -300 | 41 | 0 -300 | 1.85 | 38 | 2 | 12 | 50° | | | | 980 | 1,570 | **25** |
| 45 | | 64 | | 44.5 | | 1.85 | 43 | 2.5 | 15 | 50° | | | -8 | 1,570 | 2,740 | **30** |
| 52 | 0 -19 | 70 | | 49.5 | | 2.1 | 49 | 2.5 | 17 | 50° | 12 | 20 | | 1,670 | 3,140 | **35** |
| 60 | | 80 | | 60.5 | | 2.1 | 57 | 3 | 20 | 50° | | | -10 | 2,160 | 4,020 | **40** |
| 80 | | 100 | | 74 | | 2.6 | 76.5 | 3 | 25 | 50° | | | -13 | 3,820 | 7,940 | **50** |
| 90 | 0 -22 | 110 | | 85 | | 3.15 | 86.5 | 3 | 30 | 50° | 17 | 25 | | 4,700 | 10,000 | **60** |
| 120 | | 140 | 0 -400 | 105.5 | 0 -400 | 4.15 | 116 | 3 | 40 | 50° | | | -20 | 7,350 | 16,000 | **80** |
| 150 | 0 -25 | 175 | | 125.5 | | 4.15 | 145 | 3 | 50 | 50° | 20 | 30 | | 14,100 | 34,800 | **100** |
| 180 | | 200 | | 158.6 | | 4.15 | 175 | 3 | 85 | 80° | | | -25 | 16,400 | 40,000 | **120** |
| 210 | 0 -29 | 240 | | 170.6 | | 5.15 | 204 | 3 | 105 | 80° | 25 | 40 | | 21,100 | 54,300 | **150** |
| 260 | 0 -30 | 280 | | 210.6 | | 5.15 | 254 | 3 | 125 | 80° | 30 | 40 | -30 | 25,800 | 59,000 | **180** |
| 280 | | 320 | | 250.6 | | 5.15 | 274 | 3 | 140 | 80° | | | | 28,100 | 61,300 | **200** |

SI Unit 1N ≒ 0.102 kgf

# LBE (Resin retainer)

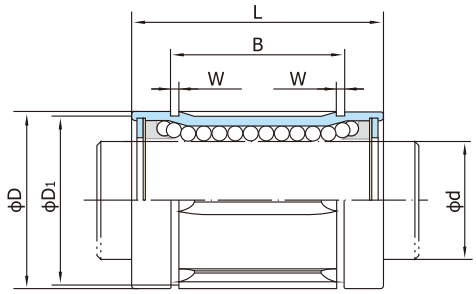


| Nominal shaft diameter (mm) | Part No. | | | | | | | | | | | |
|---|---|---|---|---|---|---|---|---|---|---|---|---|
| | SDE | Ball circuit | Weight (g) | SDE····-AJ | Ball circuit | Weight (g) | SDE····-OP | Ball circuit | Weight (g) | mm | dr Tolerance ( μm) Precision | dr Tolerance ( μm) High |
| **5** | **LBE 5** | 4 | 11 | - | - | - | - | - | - | 5 | - | +8 0 |
| **8** | **LBE 8** | 4 | 22 | - | - | - | - | - | - | 8 | | |
| **10** | **LBE 10** | 4 | 36 | - | - | - | - | - | - | 10 | | |
| **12** | **LBE 12** | 4 | 45 | **LBE 12-AJ** | 4 | 44 | **LBE 12-OP** | 3 | 35 | 12 | | |
| **16** | **LBE 16** | 4 | 60 | **LBE 16-AJ** | 4 | 59 | **LBE 16-OP** | 3 | 48 | 16 | - | +9 -1 |
| **20** | **LBE 20** | 5 | 102 | **LBE 20-AJ** | 5 | 100 | **LBE 20-OP** | 4 | 84 | 20 | | |
| **25** | **LBE 25** | 6 | 235 | **LBE 25-AJ** | 6 | 230 | **LBE 25-OP** | 5 | 195 | 25 | - | +11 -1 |
| **30** | **LBE 30** | 6 | 360 | **LBE 30-AJ** | 6 | 355 | **LBE 30-OP** | 5 | 309 | 30 | | |
| **40** | **LBE 40** | 6 | 770 | **LBE 40-AJ** | 6 | 758 | **LBE 40-OP** | 5 | 665 | 40 | - | +13 -2 |
| **50** | **LBE 50** | 6 | 1,250 | **LBE 50-AJ** | 6 | 1,230 | **LBE 50-OP** | 5 | 1,080 | 50 | | |
| **60** | **LBE 60** | 6 | 2,220 | **LBE 60-AJ** | 6 | 2,170 | **LBE 60-OP** | 5 | 1,900 | 60 | | |
| **80** | **LBE 80** | 6 | 5,140 | **LBE 80-AJ** | 6 | 5,000 | **LBE 80-OP** | 5 | 4,380 | 80 | - | +16 -4 |

**Seal type:**

LBE 12 2RS - AJ

| | |
|---|---|
| No entry | No seals |
| RS | Seal on one side |
| 2RS | Seals on both sides |

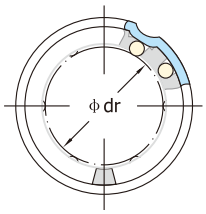


LBE
Standard type

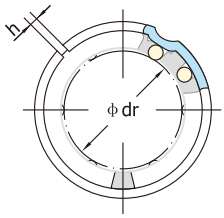


LBE-AJ
Adjustable type

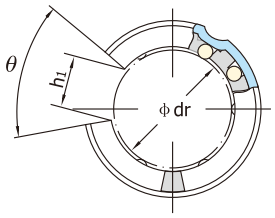


LBE-OP
Open type

| Major dimensions and tolerance | | | | | | | | | | | Eccentricity (μm) | Radial clearance (Max) μm | Basic load rating | | Nominal shaft diameter (mm) |
|---|---|---|---|---|---|---|---|---|---|---|---|---|---|---|---|
| D | | L | | B | | W | $D_1$ | h | $h_1$ | θ | | | | | |
| mm | Tolerance (μm) | mm | Tolerance (μm) | mm | Tolerance (μm) | mm | mm | mm | mm | | | | dynamic (C N) | static (Co N) | |
| 12 | 0 -8 | 22 | 0 -200 | 14.5 | 0 -200 | 1.1 | 11.5 | - | - | - | 12 | -3 | 206 | 265 | **5** |
| 16 | | 25 | | 16.5 | | 1.1 | 15.2 | - | - | - | | | 265 | 402 | **8** |
| 19 | 0 -9 | 29 | | 22 | | 1.3 | 18 | - | - | - | | -4 | 372 | 549 | **10** |
| 22 | | 32 | | 22.9 | | 1.3 | 21 | 1.5 | 7.5 | 78° | | | 510 | 784 | **12** |
| 26 | | 36 | | 24.9 | | 1.3 | 24.9 | 1.5 | 10 | 78° | | | 578 | 892 | **16** |
| 32 | 0 -11 | 45 | | 31.5 | | 1.6 | 30.3 | 2 | 10 | 60° | 15 | -6 | 862 | 1,370 | **20** |
| 40 | | 58 | 0 -300 | 44.1 | 0 -300 | 1.85 | 37.5 | 2 | 12.5 | 60° | | | 980 | 1,570 | **25** |
| 47 | | 68 | | 52.1 | | 1.85 | 44.5 | 2 | 12.5 | 50° | | -8 | 1,570 | 2,740 | **30** |
| 62 | 0 -13 | 80 | | 60.6 | | 2.15 | 59 | 3 | 16.8 | 50° | 17 | | 2,160 | 4,020 | **40** |
| 75 | | 100 | | 77.6 | | 2.65 | 72 | 3 | 21 | 50° | | -13 | 3,820 | 7,940 | **50** |
| 90 | 0 -15 | 125 | 0 -400 | 101.7 | 0 -400 | 3.15 | 86.5 | 3 | 27.2 | 54° | 20 | | 4,700 | 9,800 | **60** |
| 120 | | 165 | | 133.7 | | 4.15 | 116 | 3 | 36.3 | 54° | | -20 | 7,350 | 16,000 | **80** |

SI Unit 1N ≒ 0.102 kgf

# LM (Resin retainer)

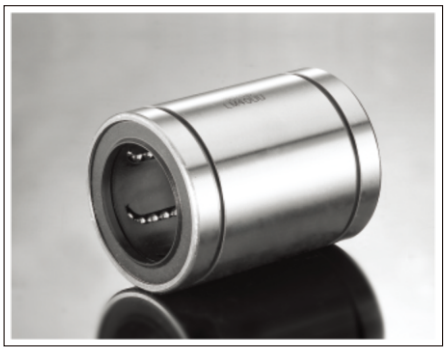

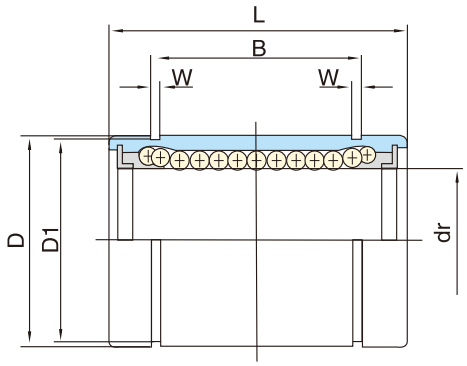


| Nominal shaft diameter (mm) | Part No. | | | | | | | | | | | |
|---|---|---|---|---|---|---|---|---|---|---|---|---|
| | LM | Ball circuit | Weight (g) | LM····-AJ | Ball circuit | Weight (g) | LM····-OP | Ball circuit | Weight (g) | dr mm | dr Tolerance ( $\mu$m) Precision | dr Tolerance ( $\mu$m) High |
| **3** | **LM 3** | 4 | 1.35 | - | - | - | - | - | - | 3 | 0 -5 | 0 -8 |
| **4** | **LM 4** | 4 | 1.9 | - | - | - | - | - | - | 4 | | |
| **5** | **LM 5** | 4 | 4 | - | - | - | - | - | - | 5 | | |
| **6** | **LM 6** | 4 | 7.6 | - | - | - | - | - | - | 6 | 0 -6 | 0 -9 |
| **8** | **LM 8S** | 4 | 10.4 | - | - | - | - | - | - | 8 | | |
| **8** | **LM 8** | 4 | 15 | - | - | - | - | - | - | 8 | | |
| **10** | **LM 10** | 4 | 29.5 | **LM 10-AJ** | 4 | 29 | **LM 10-OP** | 3 | 23 | 10 | | |
| **12** | **LM 12** | 4 | 31.5 | **LM 12-AJ** | 4 | 31 | **LM 12-OP** | 3 | 25 | 12 | | |
| **13** | **LM 13** | 4 | 43 | **LM 13-AJ** | 4 | 42 | **LM 13-OP** | 3 | 34 | 13 | | |
| **16** | **LM 16** | 4 | 69 | **LM 16-AJ** | 4 | 68 | **LM 16-OP** | 3 | 52 | 16 | | |
| **20** | **LM 20** | 5 | 87 | **LM 20-AJ** | 5 | 85 | **LM 20-OP** | 4 | 69 | 20 | 0 -7 | 0 -10 |
| **25** | **LM 25** | 6 | 220 | **LM 25-AJ** | 6 | 216 | **LM 25-OP** | 5 | 188 | 25 | | |
| **30** | **LM 30** | 6 | 250 | **LM 30-AJ** | 6 | 245 | **LM 30-OP** | 5 | 210 | 30 | | |
| **35** | **LM 35** | 6 | 390 | **LM 35-AJ** | 6 | 384 | **LM 35-OP** | 5 | 335 | 35 | 0 -8 | 0 -12 |
| **40** | **LM 40** | 6 | 585 | **LM 40-AJ** | 6 | 579 | **LM 40-OP** | 5 | 500 | 40 | | |
| **50** | **LM 50** | 6 | 1,580 | **LM 50-AJ** | 6 | 1,560 | **LM 50-OP** | 5 | 1,340 | 50 | | |
| **60** | **LM 60** | 6 | 1,860 | **LM 60-AJ** | 6 | 1,820 | **LM 60-OP** | 5 | 1,610 | 60 | 0 -9 | 0 -15 |
| **70** | **LM 70** | 6 | 2,050 | **LM 70-AJ** | 6 | 2,010 | **LM 70-OP** | 5 | 1,780 | 70 | | |
| **80** | **LM 80** | 6 | 4,420 | **LM 80-AJ** | 6 | 4,300 | **LM 80-OP** | 5 | 3,650 | 80 | | |
| **100** | **LM 100** | 6 | 8,600 | **LM 100-AJ** | 6 | 8,540 | **LM 100-OP** | 5 | 7,200 | 100 | 0 -10 | 0 -20 |
| **120** | **LM 120** | 8 | 15,000 | **LM 120-AJ** | 8 | 14,900 | **LM 120-OP** | 6 | 11,600 | 120 | | |
| **150** | **LM 150** | 8 | 20,250 | **LM 150-AJ** | 8 | 20,150 | **LM 150-OP** | 6 | 15,700 | 150 | 0 -13 | 0 -25 |
| **180** | **LM 180GA** | 8 | 33,945 | **LM 180-AJ** | 8 | 33,795 | **LM 180-OP** | 6 | 29,702 | 180 | 0 -19 | 0 -30 |
| **200** | **LM 200GA** | 8 | 42,360 | **LM 200-AJ** | 8 | 42,180 | **LM 200-OP** | 6 | 37,065 | 200 | | |

**Seal type:**

LM 12 UU - AJ

| | |
|---|---|
| No entry | No seals |
| U | Seal on one side |
| UU | Seals on both sides |

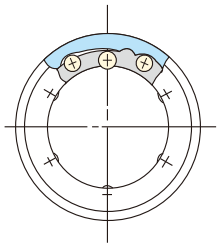

LM
Standard type

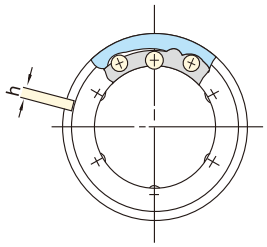


LM-AJ
Adjustable type

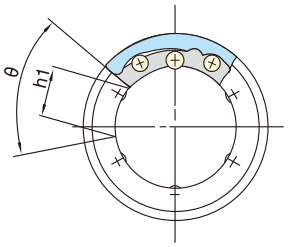


LM-OP
Open type

| Major dimensions and tolerance | | | | | | | | | | | Eccentricity | | Radial clearance (Max) μm | Basic load rating | | Nominal shaft diameter (mm) |
|---|---|---|---|---|---|---|---|---|---|---|---|---|---|---|---|---|
| D | | L | | B | | W | $D_1$ | h | $h_1$ | θ | | | | | | |
| mm | Tolerance (μm) | mm | Tolerance (μm) | mm | Tolerance (μm) | mm | mm | mm | mm | | Precision (μm) | High (μm) | | dynamic (C N) | static (Co N) | |
| 7 | 0 -9 | 10 | 0 -120 | - | - | - | - | - | - | - | 4 | 8 | -3 | 69 | 105 | **3** |
| 8 | | 12 | | - | - | - | - | - | - | - | | | | 88 | 127 | **4** |
| 10 | | 15 | | 10.2 | 0 -200 | 1.1 | 9.6 | - | - | - | | | | 167 | 206 | **5** |
| 12 | 0 -11 | 19 | 0 -200 | 13.5 | | 1.1 | 11.5 | - | - | - | 8 | 12 | | 206 | 265 | **6** |
| 15 | | 17 | | 11.5 | | 1.1 | 14.3 | - | - | - | | | | 176 | 216 | **8** |
| 15 | | 24 | | 17.5 | | 1.1 | 14.3 | - | - | - | | | | 274 | 392 | **8** |
| 19 | 0 -13 | 29 | | 22 | | 1.3 | 18 | 1 | 6.8 | 80° | | | -4 | 372 | 549 | **10** |
| 21 | | 30 | | 23 | | 1.3 | 20 | 1.5 | 8 | 80° | | | | 510 | 784 | **12** |
| 23 | | 32 | | 23 | | 1.3 | 22 | 1.5 | 9 | 80° | | | | 510 | 784 | **13** |
| 28 | | 37 | | 26.5 | | 1.6 | 27 | 1.5 | 11 | 80° | | | -6 | 774 | 1,180 | **16** |
| 32 | 0 -16 | 42 | | 30.5 | | 1.6 | 30.5 | 1.5 | 11 | 60° | 10 | 15 | | 882 | 1,370 | **20** |
| 40 | | 59 | 0 -300 | 41 | 0 -300 | 1.85 | 38 | 2 | 12 | 50° | | | | 980 | 1,570 | **25** |
| 45 | | 64 | | 44.5 | | 1.85 | 43 | 2.5 | 15 | 50° | | | -8 | 1,570 | 2,740 | **30** |
| 52 | 0 -19 | 70 | | 49.5 | | 2.1 | 49 | 2.5 | 17 | 50° | 12 | 20 | | 1,670 | 3,140 | **35** |
| 60 | | 80 | | 60.5 | | 2.1 | 57 | 3 | 20 | 50° | | | -10 | 2,160 | 4,020 | **40** |
| 80 | | 100 | | 74 | | 2.6 | 76.5 | 3 | 25 | 50° | | | -13 | 3,820 | 7,940 | **50** |
| 90 | 0 -22 | 110 | | 85 | | 3.15 | 86.5 | 3 | 30 | 50° | 17 | 25 | | 4,700 | 10,000 | **60** |
| 100 | | 130 | | 100 | | 3.15 | 96.5 | 3 | 30 | 50° | | | | 5,200 | 11,000 | **70** |
| 120 | | 140 | 0 -400 | 105.5 | 0 -400 | 4.15 | 116 | 3 | 40 | 50° | | | -20 | 7,350 | 16,000 | **80** |
| 150 | 0 -25 | 175 | | 125.5 | | 4.15 | 145 | 3 | 50 | 50° | 20 | 30 | | 14,100 | 34,800 | **100** |
| 180 | | 200 | | 158.6 | | 4.15 | 175 | 3 | 85 | 80° | | | -25 | 16,400 | 40,000 | **120** |
| 210 | 0 -29 | 240 | | 170.6 | | 5.15 | 204 | 3 | 105 | 80° | 25 | 40 | -30 | 21,100 | 54,300 | **150** |
| 260 | 0 -30 | 280 | | 210.6 | | 5.15 | 254 | 3 | 125 | 80° | 30 | 40 | | 25,800 | 59,000 | **180** |
| 280 | | 320 | | 250.6 | | 5.15 | 274 | 3 | 140 | 80° | | | | 28,100 | 61,300 | **200** |

SI Unit 1N ≒ 0.102 kgf

# LME (Resin retainer)

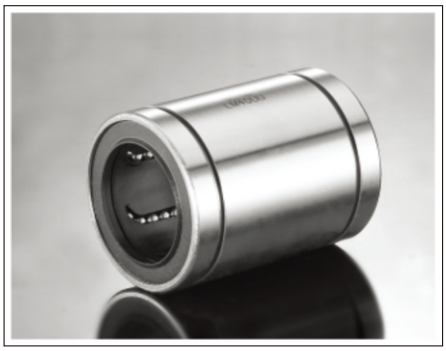

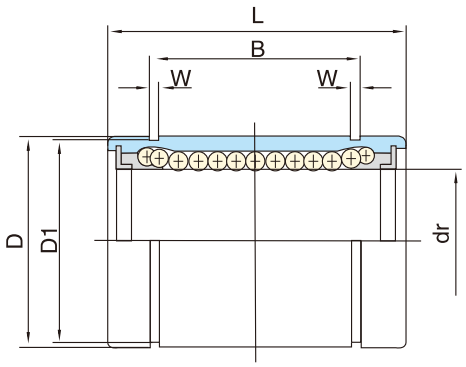


| Nominal shaft diameter (mm) | Part No. | | | | | | | | | | | |
|---|---|---|---|---|---|---|---|---|---|---|---|---|
| | LME | Ball circuit | Weight (g) | LME····-AJ | Ball circuit | Weight (g) | LME····-OP | Ball circuit | Weight (g) | dr mm | dr Tolerance ( $\mu$m) Precision | dr Tolerance ( $\mu$m) High |
| **5** | **LME 5** | 4 | 11 | **-** | - | - | **-** | - | - | 5 | - | +8 0 |
| **8** | **LME 8** | 4 | 20 | **-** | - | - | **-** | - | - | 8 | | |
| **10** | **LME 10** | 4 | 29.5 | **LME 10-AJ** | 4 | 29 | **LME 10-OP** | 3 | 23 | 10 | | |
| **12** | **LME 12** | 4 | 41 | **LME 12-AJ** | 4 | 40 | **LME 12-OP** | 3 | 32 | 12 | | |
| **16** | **LME 16** | 4 | 57 | **LME 16-AJ** | 4 | 56 | **LME 16-OP** | 3 | 44 | 16 | - | +9 -1 |
| **20** | **LME 20** | 5 | 91 | **LME 20-AJ** | 5 | 90 | **LME 20-OP** | 4 | 75 | 20 | | |
| **25** | **LME 25** | 6 | 215 | **LME 25-AJ** | 6 | 212 | **LME 25-OP** | 5 | 181 | 25 | - | +11 -1 |
| **30** | **LME 30** | 6 | 325 | **LME 30-AJ** | 6 | 320 | **LME 30-OP** | 5 | 272 | 30 | | |
| **40** | **LME 40** | 6 | 705 | **LME 40-AJ** | 6 | 694 | **LME 40-OP** | 5 | 600 | 40 | - | +13 -2 |
| **50** | **LME 50** | 6 | 1,130 | **LME 50-AJ** | 6 | 1,110 | **LME 50-OP** | 5 | 970 | 50 | | |
| **60** | **LME 60** | 6 | 2,050 | **LME 60-AJ** | 6 | 2,000 | **LME 60-OP** | 5 | 1,580 | 60 | | |
| **80** | **LME 80** | 6 | 5,000 | **LME 80-AJ** | 6 | 4,860 | **LME 80-OP** | 5 | 4,240 | 80 | - | +16 -4 |

**Seal type:**

LME 12 UU - AJ

| | |
|---|---|
| No entry | No seals |
| U | Seal on one side |
| UU | Seals on both sides |

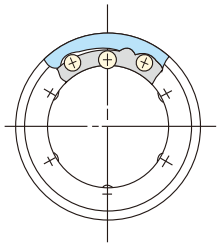

LME
Standard type

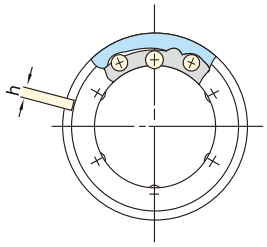


LME-AJ
Adjustable type

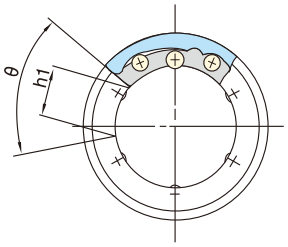


LME-OP
Open type

| Major dimensions and tolerance | | | | | | | | | | | Eccentricity (μm) | Radial clearance (Max) μm | Basic load rating | | Nominal shaft diameter (mm) |
|---|---|---|---|---|---|---|---|---|---|---|---|---|---|---|---|
| D | | L | | B | | W | $D_1$ | h | $h_1$ | θ | | | | | |
| mm | Tolerance (μm) | mm | Tolerance (μm) | mm | Tolerance (μm) | mm | mm | mm | mm | | | | dynamic (C N) | static (Co N) | |
| 12 | 0 -8 | 22 | 0 -200 | 14.5 | 0 -200 | 1.1 | 11.5 | - | - | - | 12 | -3 | 206 | 265 | **5** |
| 16 | | 25 | | 16.5 | | 1.1 | 15.2 | - | - | - | | | 265 | 402 | **8** |
| 19 | 0 -9 | 29 | | 22 | | 1.3 | 18 | 1 | 6.8 | 80° | | -4 | 372 | 549 | **10** |
| 22 | | 32 | | 22.9 | | 1.3 | 21 | 1.5 | 7.5 | 78° | | | 510 | 784 | **12** |
| 26 | | 36 | | 24.9 | | 1.3 | 24.9 | 1.5 | 10 | 78° | | | 578 | 892 | **16** |
| 32 | 0 -11 | 45 | | 31.5 | | 1.6 | 30.3 | 2 | 10 | 60° | 15 | -6 | 862 | 1,370 | **20** |
| 40 | | 58 | 0 -300 | 44.1 | 0 -300 | 1.85 | 37.5 | 2 | 12.5 | 60° | | | 980 | 1,570 | **25** |
| 47 | | 68 | | 52.1 | | 1.85 | 44.5 | 2 | 12.5 | 50° | | -8 | 1,570 | 2,740 | **30** |
| 62 | 0 -13 | 80 | | 60.6 | | 2.15 | 59 | 3 | 16.8 | 50° | 17 | | 2,160 | 4,020 | **40** |
| 75 | | 100 | | 77.6 | | 2.65 | 72 | 3 | 21 | 50° | | -13 | 3,820 | 7,940 | **50** |
| 90 | 0 -15 | 125 | 0 -400 | 101.7 | 0 -400 | 3.15 | 86.5 | 3 | 27.2 | 54° | 20 | | 4,700 | 9,800 | **60** |
| 120 | | 165 | | 133.7 | | 4.15 | 116 | 3 | 36.3 | 54° | | -20 | 7,350 | 16,000 | **80** |

SI Unit 1N ≒ 0.102 kgf

# LMB (Resin retainer)

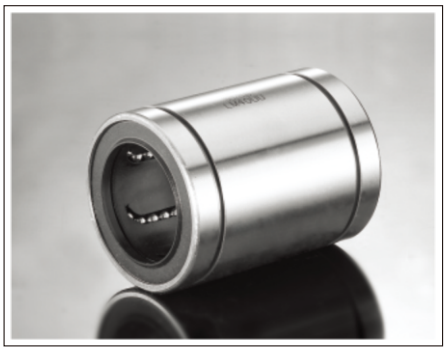

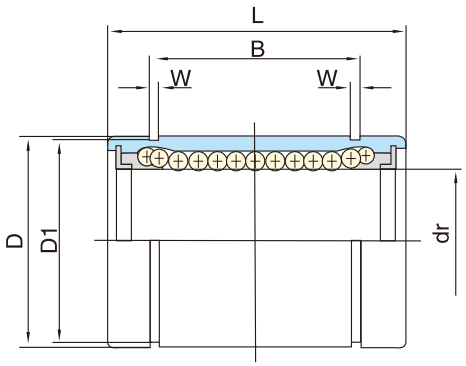


| Nominal shaft diameter (Inch/mm) | Part No. | | | | | | | | | | | |
|---|---|---|---|---|---|---|---|---|---|---|---|---|
| | LMB··· | Ball circuit | Weight (g) | LMB····-AJ | Ball circuit | Weight (g) | LMB····-OP | Ball circuit | Weight (g) | | dr Tolerance (Inch/$\mu$m) | |
| | | | | | | | | | | Inch/mm | Precision | High |
| **1/4 6.350** | **LMB 4** | 4 | 8.0 | **LMB 4-AJ** | 4 | 7.5 | **-** | - | - | .2500 6.350 | 0 -.00025 | 0 -.00040 |
| **3/8 9.525** | **LMB 6** | 4 | 14 | **LMB 6-AJ** | 4 | 13.5 | **-** | - | - | .3750 9.525 | | |
| **1/2 12.700** | **LMB 8** | 4 | 37 | **LMB 8-AJ** | 4 | 36.5 | **LMB 8-OP** | 3 | 28 | .5000 12.700 | 0 -6 | 0 -9 |
| **5/8 15.875** | **LMB 10** | 4 | 76 | **LMB 10-AJ** | 4 | 74 | **LMB 10-OP** | 3 | 57 | .6250 15.875 | | |
| **3/4 19.050** | **LMB 12** | 5 | 95 | **LMB 12-AJ** | 5 | 93 | **LMB 12-OP** | 4 | 76 | .7500 19.050 | 0 -.00030 | 0 -.00040 |
| **1 25.400** | **LMB 16** | 6 | 200 | **LMB 16-AJ** | 6 | 198 | **LMB 16-OP** | 5 | 170 | 1.0000 25.400 | 0 -7 | 0 -10 |
| **1-1/4 31.750** | **LMB 20** | 6 | 440 | **LMB 20-AJ** | 6 | 430 | **LMB 20-OP** | 5 | 370 | 1.2500 31.750 | 0 -.00035 | 0 -.00050 |
| **1-1/2 38.100** | **LMB 24** | 6 | 670 | **LMB 24-AJ** | 6 | 660 | **LMB 24-OP** | 5 | 570 | 1.5000 38.100 | 0 -8 | 0 -12 |
| **2 50.800** | **LMB 32** | 6 | 1,140 | **LMB 32-AJ** | 6 | 1,120 | **LMB 32-OP** | 5 | 980 | 2.0000 50.800 | | |

**Seal type:**

LMB 10 UU - AJ

| | |
|---|---|
| No entry | No seals |
| U | Seal on one side |
| UU | Seals on both sides |

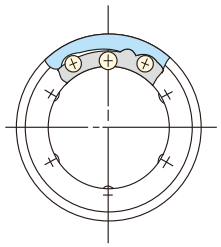

LMB
Standard type

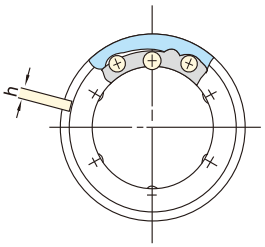


LMB-AJ
Adjustable type

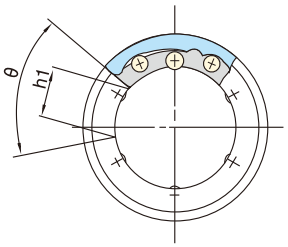


LMB-OP
Open type

| Major dimensions and tolerance | | | | | | | | | | | Eccentricity | | Radial clearance (Max) Inch/μm | Basic load rating | | Nominal shaft diameter (Inch/mm) |
|---|---|---|---|---|---|---|---|---|---|---|---|---|---|---|---|---|
| D | | L | | B | | W | $D_1$ | h | $h_1$ | θ | | | | | | |
| Inch<br>mm | Tolerance (μm) | Inch<br>mm | Tolerance (μm) | Inch<br>mm | Tolerance (μm) | Inch<br>mm | Inch<br>mm | Inch<br>mm | Inch<br>mm | | Precision (μm) | High (μm) | | dynamic (C N) | static (Co N) | |
| .5000<br>12.700 | 0<br>-.00045<br>0<br>-11 | .7500<br>19.050 | 0<br>-.008<br>0<br>-200 | .5110<br>12.98 | 0<br>-.008<br>0<br>-200 | .0390<br>0.992 | .4687<br>11.906 | .04<br>1 | - | - | .0003<br>8 | .0005<br>12 | -.0001<br>-3 | 206 | 265 | **1/4<br>6.350** |
| .6520<br>15.875 | 0<br>-.00050<br>0<br>-13 | .8750<br>22.225 | | .6358<br>16.15 | | .0390<br>0.992 | .5880<br>14.935 | .04<br>1 | - | - | | | | 225 | 314 | **3/8<br>9.525** |
| .8750<br>22.225 | | 1.2500<br>31.750 | | .9625<br>24.46 | | .0459<br>1.168 | .8209<br>20.853 | .06<br>1.5 | .34<br>7.9375 | 80° | | | -.0001<br>-4 | 510 | 784 | **1/2<br>12.700** |
| 1.1250<br>28.575 | | 1.5000<br>38.100 | | 1.1039<br>28.04 | | .0559<br>1.422 | 1.0590<br>26.899 | .06<br>1.5 | .375<br>9.525 | 80° | | | | 774 | 1,180 | **5/8<br>15.875** |
| 1.2500<br>31.750 | 0<br>-.00065<br>0<br>-16 | 1.6250<br>41.275 | | 1.1657<br>29.61 | | .0559<br>1.422 | 1.1760<br>29.870 | .06<br>1.5 | .4375<br>11.1125 | 60° | .0004<br>10 | .0006<br>15 | -.0002<br>-6 | 862 | 1,370 | **3/4<br>19.050** |
| 1.5625<br>39.688 | | 2.2500<br>57.150 | 0<br>-.012<br>0<br>-300 | 1.7547<br>44.57 | 0<br>-.012<br>0<br>-300 | .0679<br>1.727 | 1.4687<br>37.306 | .06<br>1.5 | .5625<br>14.2875 | 50° | | | | 980 | 1,570 | **1<br>25.400** |
| 2.0000<br>50.800 | 0<br>-.00075<br>0<br>-19 | 2.6250<br>66.675 | | 2.0047<br>50.92 | | .0679<br>1.727 | 1.8859<br>47.904 | .10<br>2.5 | .625<br>15.875 | 50° | .0005<br>12 | .0008<br>20 | -.0003<br>-8 | 1,570 | 2,740 | **1-1/4<br>31.750** |
| 2.3750<br>60.325 | | 3.0000<br>76.200 | | 2.4118<br>61.26 | | .0859<br>2.184 | 2.2389<br>56.870 | .12<br>3 | .75<br>19.05 | 50° | | | | 2,180 | 4,020 | **1-1/2<br>38.100** |
| 3.0000<br>76.200 | 0<br>-.00090<br>0<br>-22 | 4.0000<br>101.600 | | 3.1917<br>81.07 | | .1029<br>2.616 | 2.8379<br>72.085 | .12<br>3 | 1.0<br>25.40 | 50° | .0007<br>17 | .0010<br>25 | -.0005<br>-13 | 3,820 | 7,940 | **2<br>50.800** |

SI Unit 1N ≒ 0.225 lbs
1 kg ≒ 2.205 lbs

# LM-L (Resin retainer)

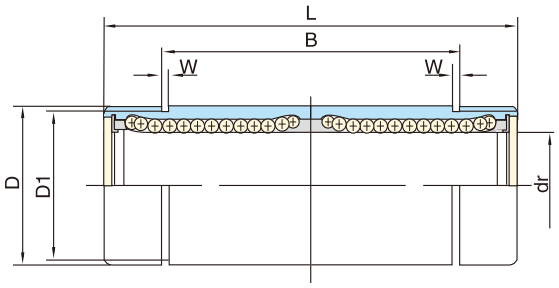


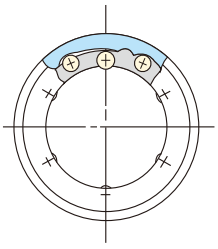

LM-L

| Steel Type | Ball circuit | Major dimensions and tolerance | | | | | | | | | | Eccen-tricity (μm) | Basic load rating | | Weight (g) | Nominal shaft diameter (mm) |
|---|---|---|---|---|---|---|---|---|---|---|---|---|---|---|---|---|
| | | dr | | D | | L | | B | | W | $D_1$ | | | | | |
| | | mm | Tolerance (μm) | mm | Tolerance (μm) | mm | Tolerance (μm) | mm | Tolerance (μm) | mm | mm | | dynamic (C N) | static (Co N) | | |
| **LM 6LUU** | 4 | 6 | 0 -10 | 12 | 0 -13 | 35 | 0 -300 | 27 | 0 -300 | 1.1 | 11.5 | 15 | 323 | 530 | 16 | **6** |
| **LM 8LUU** | 4 | 8 | | 15 | | 45 | | 35 | | 1.1 | 14.3 | | 431 | 784 | 31 | **8** |
| **LM 10LUU** | 4 | 10 | | 19 | 0 -16 | 55 | | 44 | | 1.3 | 18 | | 588 | 1,100 | 62 | **10** |
| **LM 12LUU** | 4 | 12 | | 21 | | 57 | | 46 | | 1.3 | 20 | | 813 | 1,570 | 80 | **12** |
| **LM 13LUU** | 4 | 13 | | 23 | | 61 | | 46 | | 1.3 | 22 | | 813 | 1,570 | 90 | **13** |
| **LM 16LUU** | 4 | 16 | | 28 | | 70 | | 53 | | 1.6 | 27 | | 1,230 | 2,350 | 145 | **16** |
| **LM 20LUU** | 5 | 20 | 0 -12 | 32 | 0 -19 | 80 | | 61 | | 1.6 | 30.5 | 20 | 1,400 | 2,740 | 180 | **20** |
| **LM 25LUU** | 6 | 25 | | 40 | | 112 | 0 -400 | 82 | 0 -400 | 1.85 | 38 | | 1,560 | 3,140 | 440 | **25** |
| **LM 30LUU** | 6 | 30 | | 45 | | 123 | | 89 | | 1.85 | 43 | | 2,490 | 5,490 | 480 | **30** |
| **LM 35LUU** | 6 | 35 | 0 -15 | 52 | 0 -22 | 135 | | 99 | | 2.1 | 49 | 25 | 2,650 | 6,270 | 795 | **35** |
| **LM 40LUU** | 6 | 40 | | 60 | | 151 | | 121 | | 2.1 | 57 | | 3,430 | 8,040 | 1,170 | **40** |
| **LM 50LUU** | 6 | 50 | | 80 | | 192 | | 148 | | 2.6 | 76.5 | | 6,080 | 15,900 | 3,100 | **50** |
| **LM 60LUU** | 6 | 60 | 0 -20 | 90 | 0 -25 | 209 | | 170 | | 3.15 | 86.5 | 30 | 7,550 | 20,000 | 3,500 | **60** |
| **LM80LUU** | 6 | 80 | | 120 | | 265 | | 211 | | 4.15 | 116 | | 11,760 | 16,000 | 8,200 | **80** |
| **LM100LUU** | 6 | 100 | | 150 | | 330 | | 270 | | 4.15 | 125.5 | | 22,560 | 55,680 | 14,500 | **100** |

**Seal type:**

SI Unit 1N ≒ 0.102 kgf

LM 10L UU

| | |
|---|---|
| No entry | No seals |
| UU | Seals on both sides |

# LME-L (Resin retainer)

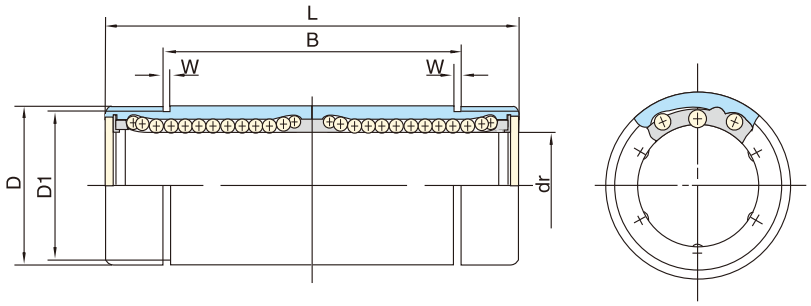


LME-L

| Steel Type | Ball circuit | Major dimensions and tolerance | | | | | | | | | | Eccen-tricity (μm) | Basic load rating | | Weight (g) | Nominal shaft diameter (mm) |
|---|---|---|---|---|---|---|---|---|---|---|---|---|---|---|---|---|
| | | dr | | D | | L | | B | | W mm | $D_1$ mm | | dynamic (C N) | static (Co N) | | |
| | | mm | Tolerance (μm) | mm | Tolerance (μm) | mm | Tolerance (μm) | mm | Tolerance (μm) | | | | | | | |
| **LME8LUU** | 4 | 8 | +9 -1 | 16 | 0 -9 | 46 | 0 -300 | 33 | 0 -300 | 1.1 | 15.2 | 15 | 421 | 804 | 40 | **8** |
| **LME12LUU** | 4 | 12 | | 22 | 0 -11 | 61 | | 45.8 | | 1.3 | 21 | | 813 | 1,570 | 80 | **12** |
| **LME16LUU** | 4 | 16 | +11 -1 | 26 | | 68 | | 49.8 | | 1.3 | 24.9 | | 921 | 1,780 | 115 | **16** |
| **LME20LUU** | 5 | 20 | | 32 | 0 -13 | 80 | | 61 | | 1.6 | 30.5 | 17 | 1,370 | 2,740 | 180 | **20** |
| **LME25LUU** | 6 | 25 | +13 -2 | 40 | | 112 | 0 -400 | 82 | 0 -400 | 1.85 | 38 | | 1,570 | 3,140 | 430 | **25** |
| **LME30LUU** | 6 | 30 | | 47 | | 123 | | 104.2 | | 1.85 | 44.5 | | 2,500 | 5,490 | 615 | **30** |
| **LME40LUU** | 6 | 40 | +16 -4 | 62 | 0 -15 | 151 | | 121.2 | | 2.15 | 59 | 20 | 3,430 | 8,040 | 1,400 | **40** |
| **LME50LUU** | 6 | 50 | | 75 | | 192 | | 155.2 | | 2.65 | 72 | | 6,080 | 15,900 | 2,320 | **50** |
| **LME60LUU** | 6 | 60 | | 90 | 0 -20 | 209 | | 170 | | 3.15 | 86.5 | 25 | 7,550 | 20,000 | 3,920 | **60** |

SI Unit 1N ≒ 0.102 kgf

**Seal type:**

LME 20L UU

| | |
|---|---|
| No entry | No seals |
| UU | Seals on both sides |

# LMB-L (Resin retainer)

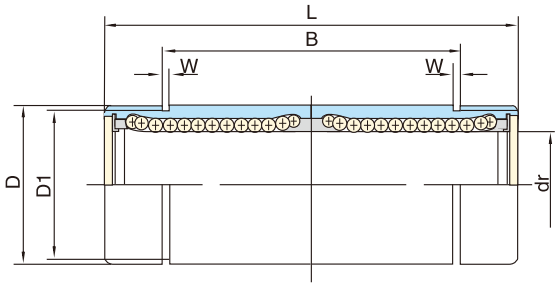


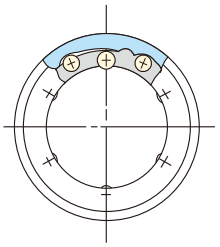

LMB-L

| Steel Type | Ball circuit | Major dimensions and tolerance | | | | | | | | | | Eccentricity (Inch/$\mu$m) | Basic load rating | |
|---|---|---|---|---|---|---|---|---|---|---|---|---|---|---|
| | | dr | | D | | L | | B | | W | $D_1$ | | | |
| | | Inch<br>mm | Tolerance (Inch/$\mu$m) | Inch<br>mm | Tolerance (Inch/$\mu$m) | Inch<br>mm | Tolerance (Inch/$\mu$m) | Inch<br>mm | Tolerance (Inch/$\mu$m) | mm | mm | | dynamic (C N) | static (Co N) |
| **LMB 4LUU** | 3* | .2500<br>6.350 | 0<br>-.00040<br>0<br>-10 | .5000<br>12.700 | 0<br>-.00050<br>0<br>-13 | 1.3750<br>34.925 | 0<br>-.012<br>0<br>-300 | 1.0220<br>25.959 | 0<br>-.012<br>0<br>-300 | .0390<br>0.992 | .4687<br>11.906 | | 323 | 530 |
| **LMB 6LUU** | 4 | .3750<br>9.525 | | .6250<br>15.785 | 0<br>-.00065<br>0<br>-16 | 1.5938<br>40.481 | | 1.2716<br>32.298 | | .0390<br>0.992 | .5880<br>14.935 | .0006 | 353 | 630 |
| **LMB 8LUU** | 4 | .5000<br>12.700 | | .8750<br>22.225 | | 2.3750<br>60.325 | | 1.9250<br>48.895 | | .0459<br>1.168 | .8209<br>20.853 | 15 | 813 | 1,570 |
| **LMB 10LUU** | 4 | .6250<br>15.875 | | 1.1250<br>28.575 | | 2.8125<br>71.438 | | 2.2079<br>56.080 | | .0559<br>1.422 | 1.0590<br>26.899 | | 1,230 | 2,350 |
| **LMB 12LUU** | 5 | .7500<br>19.050 | 0<br>-.00050<br>0<br>-12 | 1.2500<br>31.750 | 0<br>-.00075<br>0<br>-19 | 3.0937<br>78.581 | | 2.3314<br>59.218 | | .0559<br>1.422 | 1.1760<br>29.870 | .0008 | 1,370 | 2,740 |
| **LMB 16LUU** | 6 | 1.0000<br>25.400 | | 1.5625<br>39.688 | | 4.2813<br>108.744 | 0<br>-.016<br>0<br>-400 | 3.5094<br>89.139 | 0<br>-.016<br>0<br>-400 | .0679<br>1.727 | 1.4687<br>37.306 | 20 | 1,570 | 3,140 |
| **LMB 20LUU** | 6 | 1.2500<br>31.750 | 0<br>-.00060<br>0<br>-15 | 2.0000<br>50.800 | 0<br>-.00090<br>0<br>-22 | 5.0000<br>127.000 | | 4.0094<br>101.839 | | .0679<br>1.727 | 1.8859<br>47.904 | .0010 | 2,500 | 5,490 |
| **LMB 24LUU** | 6 | 1.5000<br>38.100 | | 2.3750<br>60.325 | | 5.6875<br>144.463 | | 4.8236<br>122.519 | | .0859<br>2.184 | 2.2389<br>56.870 | 25 | 3,430 | 8,040 |
| **LMB 32LUU** | 6 | 2.0000<br>50.800 | | 3.0000<br>76.200 | 0<br>-.00100<br>0<br>-25 | 7.7500<br>196.850 | | 6.3834<br>162.138 | | .1029<br>2.616 | 2.8379<br>72.085 | .0012<br>30 | 6,080 | 15,900 |

SI Unit 1N ≒ 0.102 lbs
1kg ≒ 2.205 lbs

**Seal type:**

LMB 8L UU

| | |
|---|---|
| No entry | No seals |
| UU | Seals on both sides |

# KH (Resin retainer)

KH Linear bearing series

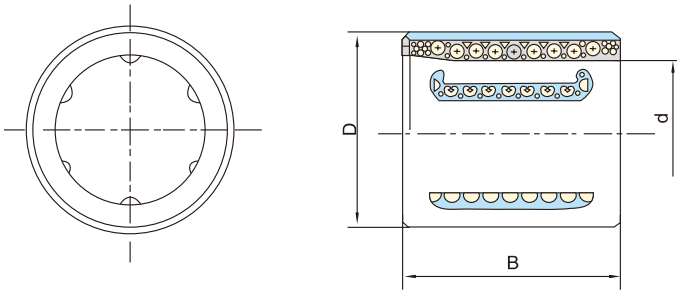


KH

| Type | Number of ball rows | Weight (g) | Main dimension (mm) | | | Basic load rating | |
|---|---|---|---|---|---|---|---|
| | | | d | D | B | dynamic (C N) | static (Co N) |
| **KH 0824** | 4 | 11.3 | 8 | 15 | 24 | 435 | 280 |
| **KH 1026** | 4 | 14.4 | 10 | 17 | 26 | 500 | 370 |
| **KH 1228** | 5 | 18.1 | 12 | 19 | 28 | 620 | 510 |
| **KH 1428** | 5 | 20.6 | 14 | 21 | 28 | 620 | 520 |
| **KH 1630** | 5 | 27.2 | 16 | 24 | 30 | 800 | 620 |
| **KH 2030** | 6 | 32.7 | 20 | 28 | 30 | 950 | 790 |
| **KH 2540** | 6 | 66 | 25 | 35 | 40 | 1990 | 1670 |
| **KH 3050** | 7 | 95 | 30 | 40 | 50 | 2800 | 2700 |
| **KH 4060** | 8 | 180 | 40 | 52 | 60 | 4400 | 4450 |
| **KH 5070** | 9 | 250 | 50 | 62 | 70 | 5500 | 6300 |

**Type number format:**

KH 16 30 PP

KH-Mini(Pressing Bush)Linear Bearing

Shaft Diameter

Length Dimension

P=seal on one side.PP=seals on both sides

# WKH (Resin retainer)

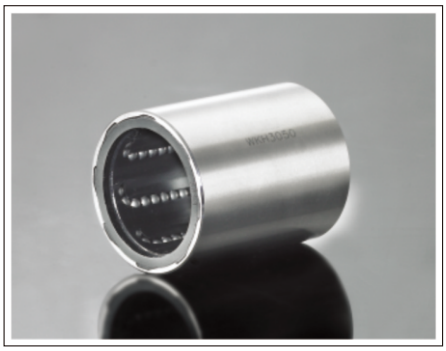

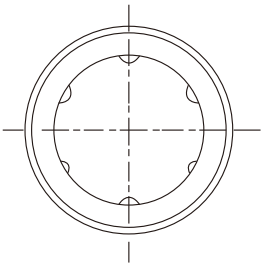

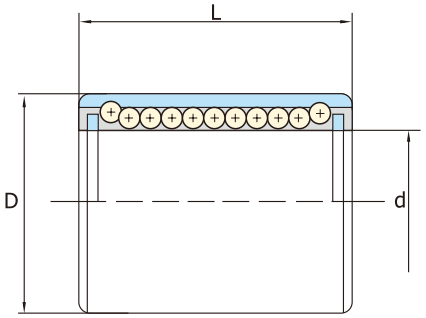


WKH

| Sferax compact GBP | d | | D | | L | | b mm | Ball Circuit | Basic load rating | |
|---|---|---|---|---|---|---|---|---|---|---|
| | mm | Tolerance ($\mu$m) | mm | Tolerance ($\mu$m) | mm | Tolerance ($\mu$m) | | | dynamic (C N) | static (Co N) |
| **WKH 1228** | 12 | 0<br>-9 | 19 | 0<br>-9 | 28 | 0<br>-200 | 2,0 | 6 | 510 | 705 |
| **WKH 1630** | 16 | | 24 | | 30 | | 2,381 | 6 | 578 | 890 |
| **WKH 2030** | 20 | 0<br>-10 | 28 | 0<br>-11 | 30 | | 2,381 | 6 | 862 | 910 |
| **WKH 2540** | 25 | | 35 | | 40 | | 3,175 | 7 | 980 | 1730 |
| **WKH 3050** | 30 | | 40 | | 50 | | 3,175 | 8 | 1570 | 2780 |

Material: The material of WKH bearing surface is bearing steel (SUJZ).
Hardness: Hardness of the shaft surface is HRC60 or more.

# KR

KR Bolt wheel needle bearing series

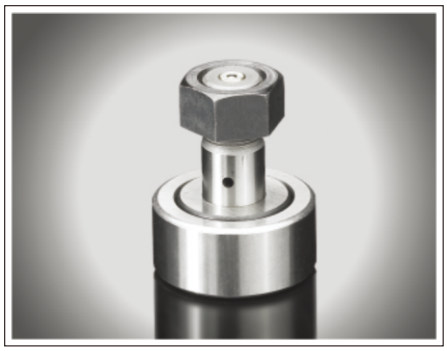

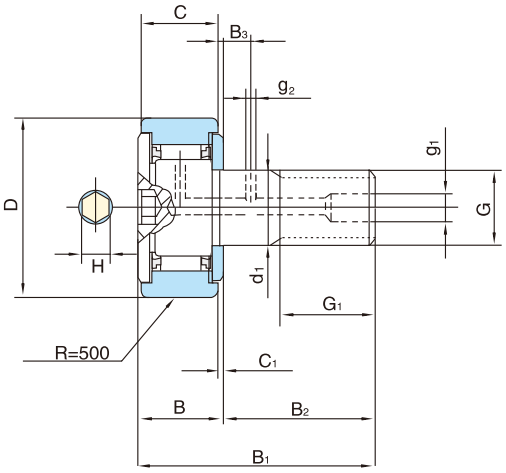


KR

| Type | | Dimension (mm) | | | | | | | | | | | |
|---|---|---|---|---|---|---|---|---|---|---|---|---|---|
| New | Old | D* | C | G | $d_1$ | $G_1$ | B | $B_1$ | $B_2$ | $B_3$ | $C_1$ | ramin | H |
| **KR10** | **CF3** | 10 | 7 | M3×0.5 | 3 | 5 | 8 | 17 | 9 | - | 0.5 | 0.2 | 2 |
| **KR12** | **CF4** | 12 | 8 | M4×0.7 | 4 | 6 | 9 | 20 | 11 | - | 0.5 | 0.3 | 2.5 |
| **KR13** | **CF5** | 13 | 9 | M5×0.8 | 5 | 7.5 | 10 | 23 | 13 | - | 0.5 | 0.3 | 3 |
| **KR16** | **CF6** | 16 | 11 | M6×1 | 6 | 8 | 12.2 | 28.2 | 16 | - | 0.6 | 0.3 | 3 |
| **KR19** | **CF8** | 19 | 11 | M8×1.25 | 8 | 10 | 12.2 | 32.2 | 20 | - | 0.6 | 0.3 | 4 |
| **KR22** | **CF10** | 22 | 12 | M10×1.25 | 10 | 12 | 13.2 | 36.2 | 23 | - | 0.6 | 0.3 | 4 |
| **KR26** | **CF10K** | 26 | 12 | M10×1.25 | 10 | 12 | 13.2 | 36.2 | 23 | - | 0.6 | 0.3 | 4 |
| **KR30** | **CF12** | 30 | 14 | M12×1.5 | 12 | 13 | 15.2 | 40.2 | 25 | 6 | 0.6 | 0.6 | 6 |
| **KR32** | **CF12K** | 32 | 14 | M12×1.5 | 12 | 13 | 15.2 | 40.2 | 25 | 6 | 0.6 | 0.6 | 6 |
| **KR35** | **CF16** | 35 | 18 | M16×1.5 | 16 | 17 | 19.6 | 52.1 | 32.5 | 8 | 0.8 | 0.6 | 6 |
| **KR40** | **CF18** | 40 | 20 | M18×1.5 | 18 | 19 | 21.6 | 58.1 | 36.5 | 8 | 0.8 | 1 | 8 |
| **KR47** | **CF20** | 47 | 24 | M20×1.5 | 20 | 21 | 21.6 | 66.1 | 40.5 | 9 | 0.8 | 1 | 8 |
| **KR52** | **CF20K** | 52 | 24 | M20×1.5 | 20 | 21 | 25.6 | 66.1 | 40.5 | 9 | 0.8 | 1 | 8 |
| **KR62** | **CF24** | 62 | 29 | M24×1.5 | 24 | 25 | 30.6 | 80.1 | 49.5 | 11 | 0.8 | 1 | 12 |
| **KR72** | **CF24K** | 72 | 29 | M24×1.5 | 24 | 25 | 30.6 | 80.1 | 49.5 | 11 | 0.8 | 1 | 12 |
| **KR80** | **CF30** | 80 | 35 | M30×1.5 | 30 | 32 | 37 | 100 | 63 | 15 | 1 | 1 | 17 |
| **KR85** | **CF30K** | 85 | 35 | M30×1.5 | 30 | 32 | 37 | 100 | 63 | 15 | 1 | 1 | 17 |
| **KR90** | **CF30J** | 90 | 35 | M30×1.5 | 30 | 32 | 37 | 100 | 63 | 15 | 1 | 1 | 17 |

1.The surface can be column or spherical surface
2.The dimension of the lubricate hole is not prescribe

# LMES Series

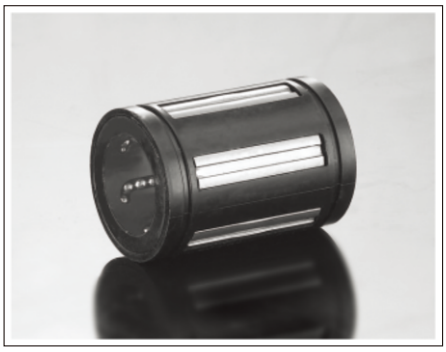

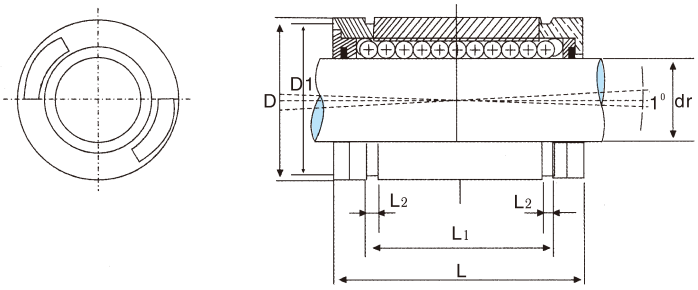


| Shaft Dia. (Mm) | Standard Type | | | | Dimensions(mm) | | | | | Diameteral Clearance | | Basic Load Ratings | |
|---|---|---|---|---|---|---|---|---|---|---|---|---|---|
| | Part number | | No.of Ball circuit | Wgt. (G) | D[1] | L ±0.2 | D1 | $L_1$ ±0.2 | $L_2$ min | dr (mm) | Tol. (μm) | Dynamic C (N) | Static Co (N) |
| | W/o seal | With seal | | | | | | | | | | | |
| 10 | LMES 10 | LMES 10UU | 5 | 17 | 19 | 29 | 18 | 21.7 | 1.35 | 10 | +8 0 | 750 | 550 |
| 12 | LMES 12 | LMES 12UU | 5 | 23 | 22 | 32 | 21 | 22.7 | 1.35 | 12 | | 1230 | 1100 |
| 16 | LMES 16 | LMES 16UU | 5 | 28 | 26 | 36 | 24.9 | 24.7 | 1.35 | 16 | +9 1 | 1550 | 1250 |
| 20 | LMES 20 | LMES 20UU | 6 | 61 | 32 | 45 | 30.3 | 31.3 | 1.65 | 20 | | 2580 | 1670 |
| 25 | LMES 25 | LMES 25UU | 6 | 122 | 40 | 58 | 37.5 | 43.8 | 1.90 | 25 | +11 1 | 3800 | 2750 |
| 30 | LMES 30 | LMES 30UU | 6 | 185 | 47 | 68 | 44.5 | 51.8 | 1.90 | 30 | | 4710 | 2800 |
| 40 | LMES 40 | LMES 40UU | 6 | 360 | 62 | 80 | 59 | 60.4 | 2.20 | 40 | +13 2 | 6500 | 5720 |
| 50 | LMES 50 | LMES 50UU | 6 | 580 | 75 | 100 | 72 | 77.4 | 2.70 | 50 | | 11460 | 7940 |

1) Based on nominal housing bore

**note) Reference of dynamic load rating**

Dynamic load rating is based on the nominal life of 50km. In case of 100km, C on the table need to be devieded by 1.26.

ex) LME20 C:2,580N C100: 2,040N

$L=(\frac{C}{P})^3 \times 50km$ $L=(\frac{C_{100}}{P})^3 \times 100km$

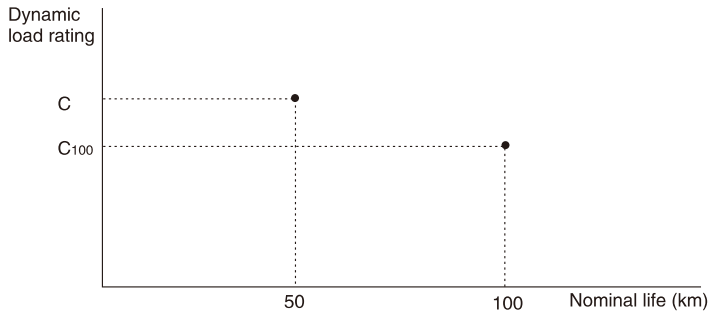

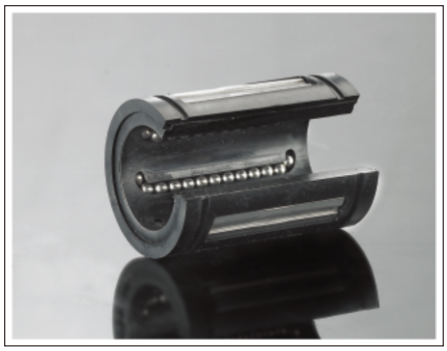

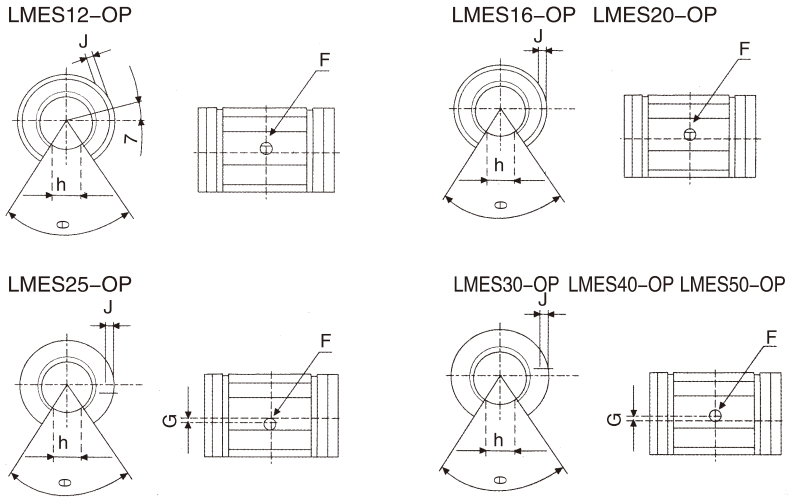


| Shaft Dia. (Mm) | Open Type | | | | Dimensions(mm) | | | | | | | | Basic Load Ratings | |
|---|---|---|---|---|---|---|---|---|---|---|---|---|---|---|
| | Part number | | No.of Ball circuit | Wgt. (G) | D[1] | L ±0.2 | $L_2$ | h | θ (°) | F | G | J | Dynamic C (N) | Static Co (N) |
| | W/o seal | With seal | | | | | | | | | | | | |
| 12 | LMES 12OP | LMES 12UUOP | 4 | 18 | 22 | 32 | 1.35 | 6.5 | 66 | 3.0 | - | 0.7 | 1290 | 1260 |
| 16 | LMES 16OP | LMES 16UUOP | 4 | 22 | 26 | 36 | 1.35 | 9 | 68 | | - | 0.7 | 1640 | 1320 |
| 20 | LMES 20OP | LMES 20UUOP | 5 | 51 | 32 | 45 | 1.65 | 9 | 55 | | - | 0.9 | 2630 | 1720 |
| 25 | LMES 25OP | LMES 25UUOP | 5 | 102 | 40 | 58 | 1.90 | 11.5 | 57 | | 1.5 | 1.4 | 3910 | 2850 |
| 30 | LMES 30OP | LMES 30UUOP | 5 | 155 | 47 | 68 | 1.90 | 14 | 57 | | 2.0 | 2.2 | 4850 | 2900 |
| 40 | LMES 40OP | LMES 40UUOP | 5 | 300 | 62 | 80 | 2.20 | 19.5 | 56 | | 1.5 | 2.7 | 6700 | 5900 |
| 50 | LMES 50OP | LMES 50UUOP | 5 | 480 | 75 | 100 | 2.70 | 22.5 | 54 | | 2.5 | 2.3 | 11700 | 8100 |

1N ≒ 0.102 kgf

## Part Number Notation

**Super Linear Ball Bushing's part number notation is as follows**

**LM□S** **25** **UU** **OP**

**Model**
E:ISO Standard(metic)
B:Imperial Standard(inch)

**LM Shaft Diameter**

**Type**
–: Standard Type
OP:Open Type

**Seal**
–: No seal
UU:Seals on both sides

# LMBS Series

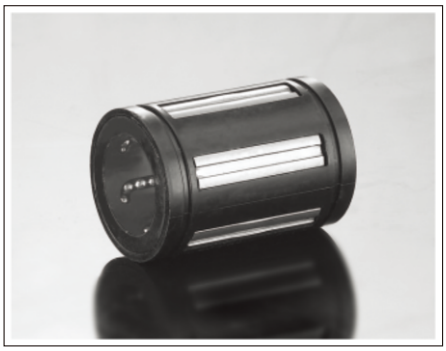

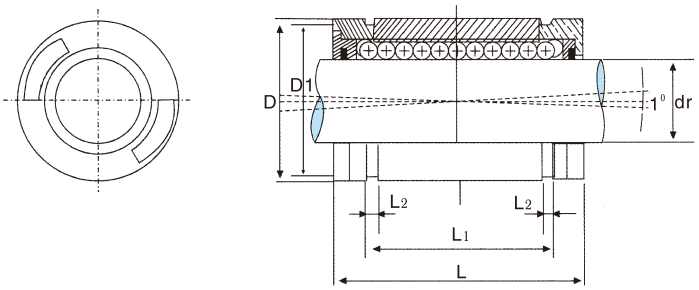


| Shaft Dia. (Inch) | Standard Type | | | | Dimensions(mm) | | | | | | | Basic Load Ratings | |
|---|---|---|---|---|---|---|---|---|---|---|---|---|---|
| | Part number | | No.of Ball circuit | Wgt. (Lbf) | Working Bore Diameter | | D[1] | D1 | L | $L_1$ | $L_2$ min | Dynamic C (lbf) | Static Co (lbf) |
| | W/o seal | With seal | | | dr | Tol. | | | | | | | |
| 1/4 | LMBS 4 | LMBS 4UU | 4 | 0.01 | 0.2500 | 0 -0.0005 | 0.5000 | 0.4687 | 0.750/0.735 | 0.511/0.501 | 0.039 | 57 | 49 |
| 3/8 | LMBS 6 | LMBS 6UU | 4 | 0.02 | 0.3750 | | 0.6250 | 0.5880 | 0.875/0.860 | 0.699/0.689 | 0.039 | 78 | 66 |
| 1/2 | LMBS 8 | LMBS 8UU | 4 | 0.05 | 0.5000 | | 0.8750 | 0.8200 | 1.250/1.230 | 1.032/1.012 | 0.050 | 190 | 190 |
| 5/8 | LMBS 10 | LMBS 10UU | 5 | 0.08 | 0.6250 | | 1.1250 | 1.0590 | 1.500/1.480 | 1.105/1.095 | 0.056 | 290 | 340 |
| 3/4 | LMBS 12 | LMBS 12UU | 6 | 0.14 | 0.7500 | | 1.2500 | 1.1760 | 1.625/1.605 | 1.270/1.250 | 0.056 | 500 | 430 |
| 1 | LMBS 16 | LMBS 16UU | 6 | 0.29 | 1.0000 | | 1.5625 | 1.4687 | 2.250/2.230 | 1.884/1.864 | 0.070 | 820 | 780 |
| 1-1/4 | LMBS 20 | LMBS 20UU | 6 | 0.40 | 1.2500 | 0 -0.0006 | 2.0000 | 1.8859 | 2.625/2.600 | 2.004/1.984 | 0.068 | 1240 | 1270 |
| 1-1/2 | LMBS 24 | LMBS 24UU | 6 | 0.80 | 1.5000 | | 2.3750 | 2.2389 | 3.000/2.970 | 2.410/2.390 | 0.086 | 1510 | 1540 |
| 2 | LMBS 32 | LMBS 32UU | 6 | 1.38 | 2.0000 | 0 -0.0008 | 3.0000 | 2.8379 | 4.000/3.960 | 3.193/3.163 | 0.105 | 2230 | 2580 |

1) Based on nominal housing bore

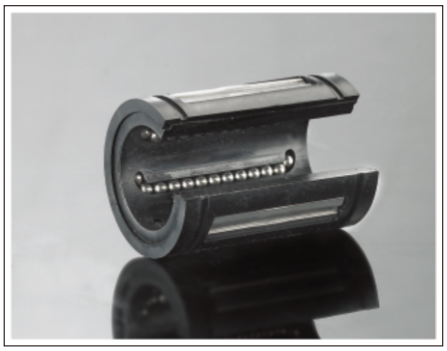

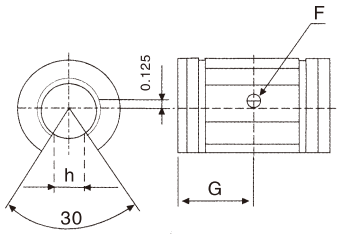


LMBS08–OP

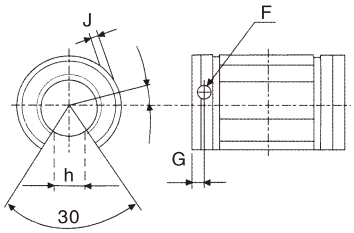


LMBS10–OP

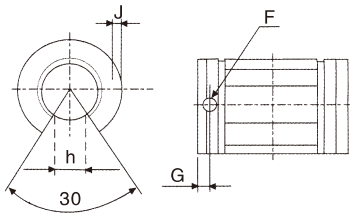


LMBS12–OP through LMBS32–OP

| Shaft Dia. (Inch) | Open Type | | | | Dimensions(mm) | | | | | | | Basic Load Ratings | |
|---|---|---|---|---|---|---|---|---|---|---|---|---|---|
| | Part number | | No.of Ball circuit | Wgt. (ibf) | D[1] | L | F | G | J | $L_2$ (min) | h | Dynamic C (lbt) | Static Co (lbt) |
| | W/o seal | With seal | | | | | | | | | | | |
| 1/2 | LMBS 8OP | LMBS 8UUOP | 3 | 0.03 | 0.8750 | 1.250/1.230 | 0.14 | 0.63 | Thur | 0.050 | 0.32 | 210 | 190 |
| 5/8 | LMBS 10OP | LMBS 10UUOP | 4 | 0.06 | 1.1250 | 1.500/1.480 | 0.11 | 0.13 | 0.039 | 0.056 | 0.38 | 320 | 340 |
| 3/4 | LMBS 12OP | LMBS 12UUOP | 5 | 0.11 | 1.2500 | 1.625/1.605 | 0.14 | 0.13 | 0.059 | 0.056 | 0.43 | 510 | 430 |
| 1 | LMBS 16OP | LMBS 16UUOP | 5 | 0.21 | 1.5625 | 2.250/2.230 | 0.14 | 0.13 | 0.047 | 0.070 | 0.56 | 830 | 780 |
| 1-1/4 | LMBS 20OP | LMBS 20UUOP | 5 | 0.35 | 2.0000 | 2.625/2.600 | 0.20 | 0.19 | 0.090 | 0.068 | 0.63 | 1250 | 1270 |
| 1-1/2 | LMBS 24OP | LMBS 24UUOP | 5 | 0.67 | 2.3750 | 3.000/2.970 | 0.20 | 0.19 | 0.090 | 0.086 | 0.75 | 1520 | 1540 |
| 2 | LMBS 32OP | LMBS 32UUOP | 5 | 1.10 | 3.0000 | 4.000/3.960 | 0.27 | 0.31 | - | 0.105 | 1.00 | 2250 | 2580 |

1) Based on nominal housing bore

# ST / ST-B

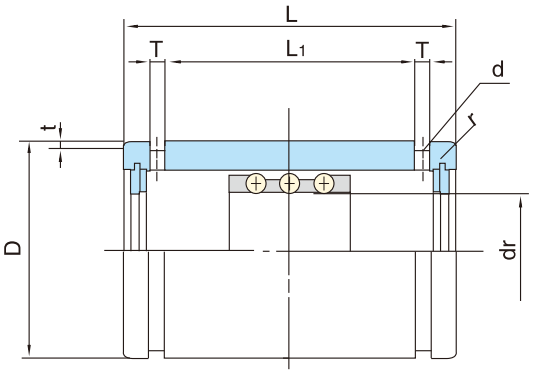


ST

| Nominal shaft diameter (mm) | Part No. | | | | | | | | | | | | | |
|---|---|---|---|---|---|---|---|---|---|---|---|---|---|---|
| | ST<br>ST…B | ST…UU<br>ST…UUB | dr<br>mm | dr<br>Tolerance (μm) | D<br>mm | D<br>Tolerance (μm) | L<br>mm | L<br>Tolerance (μm) | L1<br>mm | L2<br>mm | T<br>mm | t<br>mm | d<br>mm | r<br>mm |
| **6** | **ST 6** | **-** | 6 | +22<br>+13 | 12 | 0<br>-11 | 20 | 0<br>-200 | 11.3 | - | 1.1 | 0.5 | 1 | 0.5 |
| **8** | **ST 8<br>ST 8B** | **ST 8UU<br>ST 8UUB** | 8 | | 15 | | 24 | | 17.1 | 12.3 | 1.5 | 0.5 | 1.2 | 0.5 |
| **10** | **ST 10<br>ST 10B** | **ST 10UU<br>ST 10UUB** | 10 | | 19 | 0<br>-13 | 30 | | 22.7 | 15.5 | 1.5 | 0.5 | 1.2 | 0.5 |
| **12** | **ST 12<br>ST 12B** | **ST 12UU<br>ST 12UUB** | 12 | +27<br>+16 | 23 | | 32 | | 24.5 | 17.1 | 1.5 | 0.5 | 1.2 | 0.5 |
| **16** | **ST 16<br>ST 16B** | **ST 16UU<br>ST 16UUB** | 16 | | 28 | | 37 | | 29.1 | 21.1 | 1.5 | 0.7 | 1.3 | 0.5 |
| **20** | **ST 20<br>ST 20B** | **ST 20UU<br>ST 20UUB** | 20 | +33<br>+20 | 32 | 0<br>-16 | 45 | | 35.8 | 26.8 | 2 | 0.7 | 1.5 | 0.5 |
| **25** | **ST 25<br>ST 25B** | **ST 25UU<br>ST 25UUB** | 25 | | 37 | | 45 | 0<br>-300 | 35.8 | 26.8 | 2 | 0.7 | 1.6 | 1 |
| **30** | **ST 30<br>ST 30B** | **ST 30UU<br>ST 30UUB** | 30 | | 45 | | 65 | | 53.5 | 45.1 | 2.5 | 1 | 2 | 1 |
| **35** | **ST 35<br>ST 35B** | **ST 35UU<br>ST 35UUB** | 35 | +41<br>+25 | 52 | 0<br>-19 | 70 | | 58.5 | 50.1 | 2.5 | 1 | 2 | 1.5 |
| **40** | **ST 40<br>ST 40B** | **ST 40UU<br>ST 40UUB** | 40 | | 60 | | 80 | | 68.3 | 59.9 | 2.5 | 1 | 2 | 1.5 |
| **50** | **ST 50<br>ST 50B** | **ST 50UU<br>ST 50UUB** | 50 | | 72 | | 100 | | 86.4 | 77.4 | 3 | 1 | 2.5 | 1.5 |
| **60** | **ST 60<br>ST 60B** | **ST 60UU<br>ST 60UUB** | 60 | +49<br>+30 | 85 | 0<br>-22 | 100 | | 86.4 | 77.4 | 3 | 1 | 2.5 | 2 |
| **80** | **ST 80<br>ST 80B** | **ST 80UU<br>ST 80UUB** | 80 | | 110 | | 100 | 0<br>-400 | 86 | 77 | 3 | 1.5 | 2.5 | 2 |
| **100** | **ST 100<br>ST 100B** | **ST 100UU<br>ST 100UUB** | 100 | +58<br>+36 | 130 | 0<br>-25 | 100 | | 86 | 77 | 3 | 1.5 | 2.5 | 2 |

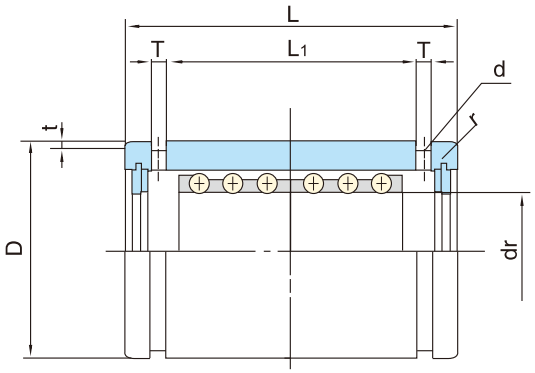


ST…B

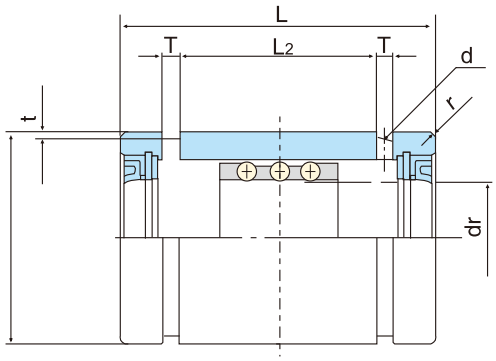


ST -UU

| ST | | | | | ST…B | | | | | Nominal shaft diameter (mm) |
|---|---|---|---|---|---|---|---|---|---|---|
| No. of rows | Maximum stroke | Basic load rating | | Weight (g) | No. of rows | Maximum stroke | Basic load rating | | Weight (g) | |
| | | dynamic (C N) | static (Co N) | | | | dynamic (C N) | static (Co N) | | |
| 3 | 20 | 216 | 147 | 8.9 | - | - | - | - | - | **6** |
| 3 | 24 | 343 | 245 | 15.6 | 6 | 8 | 549 | 490 | 16.8 | **8** |
| 3 | 30 | 637 | 461 | 28.8 | 6 | 8 | 1,030 | 931 | 31.2 | **10** |
| 3 | 32 | 1,070 | 813 | 42 | 6 | 8 | 1,720 | 1,630 | 46 | **12** |
| 3 | 40 | 1,180 | 990 | 71 | 6 | 16 | 1,910 | 1,980 | 75 | **16** |
| 3 | 50 | 1,260 | 1,170 | 99 | 6 | 20 | 2,060 | 2,320 | 106 | **20** |
| 3 | 50 | 1,330 | 1,330 | 117 | 6 | 20 | 2,170 | 2,670 | 125 | **25** |
| 3 | 82 | 2,990 | 3,140 | 205 | 6 | 44 | 4,800 | 6,270 | 220 | **30** |
| 3 | 92 | 3,140 | 3,530 | 329 | 6 | 54 | 5,050 | 7,060 | 346 | **35** |
| 3 | 108 | 4,120 | 4,800 | 516 | 6 | 66 | 6,710 | 9,560 | 540 | **40** |
| 3 | 138 | 5,540 | 6,910 | 827 | 6 | 88 | 8,970 | 13,800 | 862 | **50** |
| 3 | 138 | 5,980 | 8,230 | 1,240 | 6 | 88 | 9,700 | 16,500 | 1,290 | **60** |
| 3 | 132 | 7,840 | 12,200 | 2,050 | 6 | 76 | 12,700 | 24,300 | 2,110 | **80** |
| 3 | 132 | 8,430 | 14,700 | 2,440 | 6 | 76 | 13,700 | 29,400 | 2,520 | **100** |

SI Unit 1N ≒ 0.102 kgf

CLCi

# < Linear Ball Bushing System >
# < Flanged Type Linear Ball Bushing >

# FLANGE SLIDE SERIES

# SDMF (Steel retainer) SDMK (Steel retainer)

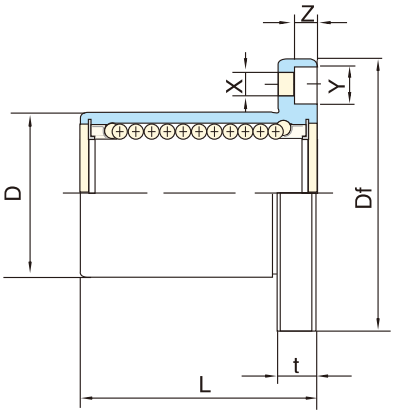


| Nominal shaft diameter (mm) | Part No. Steel SDF(K) | Weight (g) | Major dimensions and tolerance | | | | | | |
|---|---|---|---|---|---|---|---|---|---|
| | | | dr | | D | | | L | |
| | | | mm | Tolerance ($\mu$m) | mm | Tolerance ($\mu$m) | Df mm | mm | Tolerance ($\mu$m) |
| 6 | **SDMF 6GA**<br>**SDMK 6GA** | 24<br>18 | 6 | 0<br>-9 | 12 | 0<br>-13 | 28 | 19 | ± 300 |
| 8 | **SDMF 8SGA**<br>**SDMK 8SGA** | 32<br>24 | 8 | | 15 | | 32 | 17 | |
| 8 | **SDMF 8GA**<br>**SDMK 8GA** | 37<br>29 | 8 | | 15 | | 32 | 24 | |
| 10 | **SDMF 10GA**<br>**SDMK 10GA** | 72<br>52 | 10 | | 19 | 0<br>-16 | 40 | 29 | |
| 12 | **SDMF 12GA**<br>**SDMK 12GA** | 76<br>57 | 12 | | 21 | | 42 | 30 | |
| 13 | **SDMF 13GA**<br>**SDMK 13GA** | 88<br>72 | 13 | | 23 | | 43 | 32 | |
| 16 | **SDMF 16GA**<br>**SDMK 16GA** | 120<br>104 | 16 | | 28 | | 48 | 37 | |
| 20 | **SDMF 20GA**<br>**SDMK 20GA** | 180<br>145 | 20 | 0<br>-10 | 32 | 0<br>-19 | 54 | 42 | |
| 25 | **SDMF 25GA**<br>**SDMK 25GA** | 340<br>300 | 25 | | 40 | | 62 | 59 | |
| 30 | **SDMF 30GA**<br>**SDMK 30GA** | 470<br>375 | 30 | | 45 | | 74 | 64 | |
| 35 | **SDMF 35GA**<br>**SDMK 35GA** | 650<br>560 | 35 | 0<br>-12 | 52 | 0<br>-22 | 82 | 70 | |
| 40 | **SDMF 40GA**<br>**SDMK 40GA** | 1,060<br>880 | 40 | | 60 | | 96 | 80 | |
| 50 | **SDMF 50GA**<br>**SDMK 50GA** | 2,200<br>2,000 | 50 | | 80 | | 116 | 100 | |
| 60 | **SDMF 60GA**<br>**SDMK 60GA** | 3,000<br>2,560 | 60 | 0<br>-15 | 90 | 0<br>-25 | 134 | 110 | |
| 80 | **SDMF 80GA**<br>**SDMK 80GA** | 5,800<br>5,300 | 80 | | 120 | | 164 | 140 | |
| 100 | **SDMF 100GA**<br>**SDMK 100GA** | 10,600<br>9,900 | 100 | 0<br>-20 | 150 | 0<br>-29 | 200 | 175 | |

**Seal type:**

SDMF 10 UU

| | |
|---|---|
| No entry | No seals |
| UU | Seals on both sides |

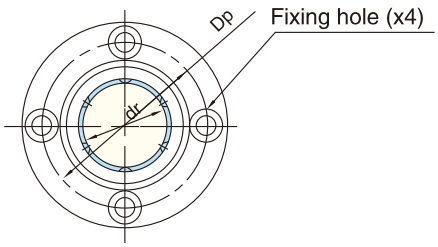


SDMF

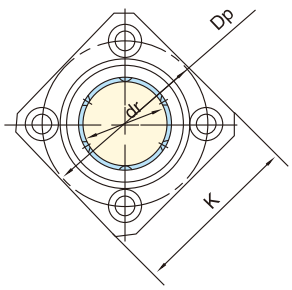


SDMK

| Major dimensions and tolerance | | | | | | Eccentricity (μm) | Squareness (μm) | Basic load rating | | Nominal shaft diameter (mm) |
|---|---|---|---|---|---|---|---|---|---|---|
| Flange | | | | | | | | | | |
| K mm | t mm | Dp mm | X mm | Y mm | Z mm | | | dynamic (C N) | static (Co N) | |
| 22 | 5 | 20 | 3.5 | 6 | 3.1 | 12 | 12 | 206 | 265 | 6 |
| 25 | 5 | 24 | 3.5 | 6 | 3.1 | | | 176 | 216 | 8 |
| 25 | 5 | 24 | 3.5 | 6 | 3.1 | | | 274 | 392 | 8 |
| 30 | 6 | 29 | 4.5 | 7.5 | 4.1 | | | 372 | 549 | 10 |
| 32 | 6 | 32 | 4.5 | 7.5 | 4.1 | | | 510 | 784 | 12 |
| 34 | 6 | 33 | 4.5 | 7.5 | 4.1 | | | 510 | 784 | 13 |
| 37 | 6 | 38 | 4.5 | 7.5 | 4.1 | | | 774 | 1,180 | 16 |
| 42 | 8 | 43 | 5.5 | 9 | 5.1 | 15 | 15 | 882 | 1,370 | 20 |
| 50 | 8 | 51 | 5.5 | 9 | 5.1 | | | 980 | 1,570 | 25 |
| 58 | 10 | 60 | 6.6 | 11 | 6.1 | | | 1,570 | 2,740 | 30 |
| 64 | 10 | 67 | 6.6 | 11 | 6.1 | 20 | 20 | 1,670 | 3,140 | 35 |
| 75 | 13 | 78 | 9 | 14 | 8.1 | | | 2,160 | 4,020 | 40 |
| 92 | 13 | 98 | 9 | 14 | 8.1 | | | 3,820 | 7,940 | 50 |
| 106 | 18 | 112 | 11 | 17 | 11.1 | 25 | 25 | 4,700 | 10,000 | 60 |
| 136 | 18 | 142 | 11 | 17 | 11.1 | | | 7,350 | 16,000 | 80 |
| 170 | 20 | 175 | 14 | 20 | 13.1 | 30 | 30 | 14,100 | 34,800 | 100 |

SI Unit 1N ≒ 0.102 kgf

# SDMH (Steel retainer)

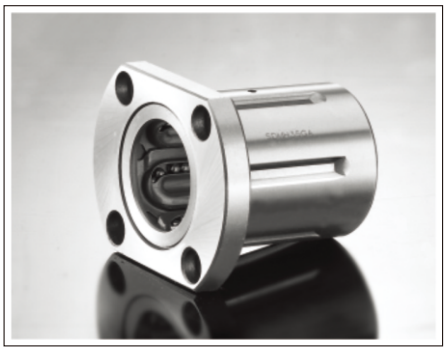

This type is a metric dimension series widely used in Japan and other countries.

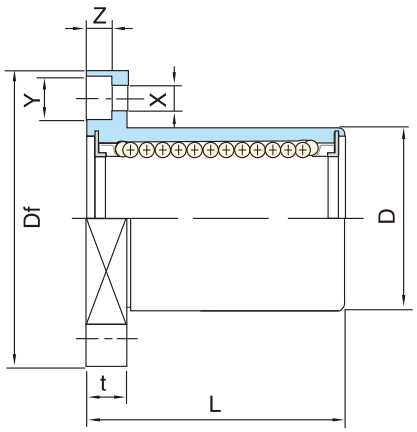


| Nominal shaft diameter (mm) | Part No. Steel SDMH··· | Weight (g) | Major dimensions and tolerance | | | | | | |
|---|---|---|---|---|---|---|---|---|---|
| | | | dr | | D | | | L | |
| | | | mm | Tolerance (μm) | mm | Tolerance (μm) | Df mm | mm | Tolerance (μm) |
| 6 | **SDMH 6GA** | 21 | 6 | 0 -9 | 12 | 0 -13 | 28 | 19 | ± 300 |
| 8 | **SDMH 8GA** | 33 | 8 | | 15 | | 32 | 24 | |
| 10 | **SDMH 10GA** | 64 | 10 | | 19 | 0 -16 | 40 | 29 | |
| 12 | **SDMH 12GA** | 68 | 12 | | 21 | | 42 | 30 | |
| 13 | **SDMH 13GA** | 81 | 13 | | 23 | | 43 | 32 | |
| 16 | **SDMH 16GA** | 112 | 16 | | 28 | | 48 | 37 | |
| 20 | **SDMH 20GA** | 167 | 20 | 0 -10 | 32 | 0 -19 | 54 | 42 | |
| 25 | **SDMH 25GA** | 325 | 25 | | 40 | | 62 | 59 | |
| 30 | **SDMH 30GA** | 388 | 30 | | 45 | | 74 | 64 | |
| 35 | **SDMH 35GA** | 524 | 35 | 0 -12 | 52 | 0 -22 | 82 | 70 | |
| 40 | **SDMH 40GA** | 836 | 40 | | 60 | | 96 | 80 | |
| 50 | **SDMH 50GA** | 2050 | 50 | 0 -15 | 80 | 0 -25 | 116 | 100 | |

Note: All sizes of SDMH type are sealed on both sides.

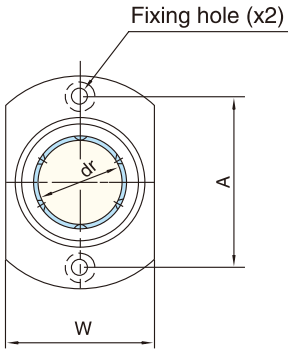


SDMH13 or less

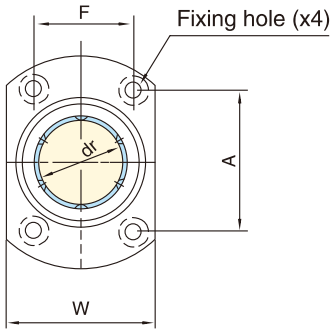


SDMH16 or more

| Major dimensions and tolerance | | | | | | | Eccentricity (μm) | Squareness (μm) | Basic load rating | | Nominal shaft diameter (mm) |
|---|---|---|---|---|---|---|---|---|---|---|---|
| Flange | | | | | | | | | | | |
| W mm | t mm | A mm | F mm | X mm | Y mm | Z mm | | | dynamic (C N) | static (Co N) | |
| 18 | 5 | 20 | - | 3.5 | 6 | 3.1 | 12 | 12 | 206 | 265 | 6 |
| 21 | 5 | 24 | - | 3.5 | 6 | 3.1 | | | 274 | 392 | 8 |
| 25 | 6 | 29 | - | 4.5 | 7.5 | 4.1 | | | 372 | 549 | 10 |
| 27 | 6 | 32 | - | 4.5 | 7.5 | 4.1 | | | 510 | 784 | 12 |
| 29 | 6 | 33 | - | 4.5 | 7.5 | 4.1 | | | 510 | 784 | 13 |
| 34 | 6 | 31 | 22 | 4.5 | 7.5 | 4.1 | | | 774 | 1,180 | 16 |
| 38 | 8 | 36 | 24 | 5.5 | 9 | 5.1 | 15 | 15 | 882 | 1,370 | 20 |
| 46 | 8 | 40 | 32 | 5.5 | 9 | 5.1 | | | 980 | 1,570 | 25 |
| 51 | 10 | 49 | 35 | 6.6 | 11 | 6.1 | | | 1,570 | 2,740 | 30 |
| 60 | 10 | 55 | 38 | 6.6 | 11 | 6.1 | 20 | 20 | 1,670 | 3,140 | 35 |
| 70 | 13 | 64 | 45 | 9 | 14 | 8.1 | | | 2,160 | 4,020 | 40 |
| 86 | 13 | 80 | 56 | 9 | 14 | 8.1 | | | 3,820 | 7,940 | 50 |

SI Unit 1N ≒ 0.102 kgf

# SDEF (Steel retainer) SDEK (Steel retainer)

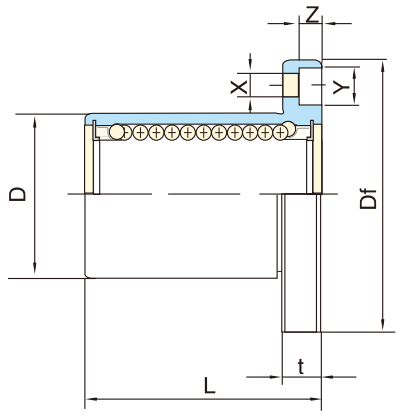


| Nominal shaft diameter (mm) | Part No. Steel SDEF(K) | Weight (g) | Major dimensions and tolerance | | | | | | |
|---|---|---|---|---|---|---|---|---|---|
| | | | dr | | D | | | L | |
| | | | mm | Tolerance (μm) | mm | Tolerance (μm) | Df mm | mm | Tolerance (μm) |
| 8 | **SDEF 8GA**<br>**SDEK 8GA** | 41<br>33 | 8 | +8<br>0 | 16 | 0<br>-13 | 32 | 25 | ± 300 |
| 12 | **SDEF 12GA**<br>**SDEK 12GA** | 80<br>64 | 12 | | 22 | 0<br>-16 | 42 | 32 | |
| 16 | **SDEF 16GA**<br>**SDEK 16GA** | 103<br>90 | 16 | +9<br>-1 | 26 | | 46 | 36 | |
| 20 | **SDEF 20GA**<br>**SDEK 20GA** | 182<br>147 | 20 | | 32 | 0<br>-19 | 54 | 45 | |
| 25 | **SDEF 25GA**<br>**SDEK 25GA** | 335<br>295 | 25 | +11<br>-1 | 40 | | 62 | 58 | |
| 30 | **SDEF 30GA**<br>**SDEK 30GA** | 560<br>465 | 30 | | 47 | | 76 | 68 | |
| 40 | **SDEF 40GA**<br>**SDEK 40GA** | 1,175<br>975 | 40 | +13<br>-2 | 62 | 0<br>-22 | 98 | 80 | |
| 50 | **SDEF 50GA**<br>**SDEK 50GA** | 1,745<br>1,545 | 50 | | 75 | | 112 | 100 | |
| 60 | **SDEF 60GA**<br>**SDEK 60GA** | 3,220<br>2,780 | 60 | | 90 | 0<br>-25 | 134 | 125 | |
| 80 | **SDEF 80GA**<br>**SDEK 80GA** | 6,420<br>5,920 | 80 | +16<br>-4 | 120 | | 164 | 165 | |

**Seal type:**

SDEF 80 UU

| | |
|---|---|
| No entry | No seals |
| UU | Seals on both sides |

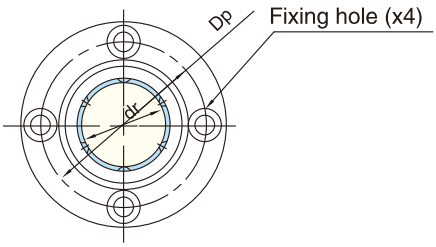


SDEF

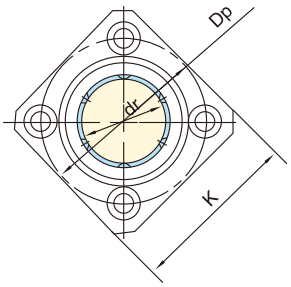


SDEK

| Major dimensions and tolerance | | | | | | Eccentricity (μm) | Squareness (μm) | Basic load rating | | Nominal shaft diameter (mm) |
|---|---|---|---|---|---|---|---|---|---|---|
| Flange | | | | | | | | | | |
| K mm | t mm | Dp mm | X mm | Y mm | Z mm | | | dynamic (C N) | static (Co N) | |
| 25 | 5 | 24 | 3.5 | 6 | 3.1 | 12 | 12 | 265 | 402 | 8 |
| 32 | 6 | 32 | 4.5 | 7.5 | 4.1 | | | 510 | 784 | 12 |
| 35 | 6 | 36 | 4.5 | 7.5 | 4.1 | | | 578 | 892 | 16 |
| 42 | 8 | 43 | 5.5 | 9 | 5.1 | | | 862 | 1,370 | 20 |
| 50 | 8 | 51 | 5.5 | 9 | 5.1 | 15 | 15 | 980 | 1,570 | 25 |
| 60 | 10 | 62 | 6.6 | 11 | 6.1 | | | 1,570 | 2,740 | 30 |
| 75 | 13 | 80 | 9 | 14 | 8.1 | | | 2,160 | 4,020 | 40 |
| 88 | 13 | 94 | 9 | 14 | 8.1 | 17 | 17 | 3,820 | 7,940 | 50 |
| 106 | 18 | 112 | 11 | 17 | 11.1 | | | 4,700 | 9,800 | 60 |
| 136 | 18 | 142 | 11 | 17 | 11.1 | 20 | 20 | 7,350 | 16,000 | 80 |

SI Unit 1N ≒ 0.102 kgf

# LMF (Resin retainer) LMK (Resin retainer)
# LMSF (Resin retainer) LMSK (Resin retainer)

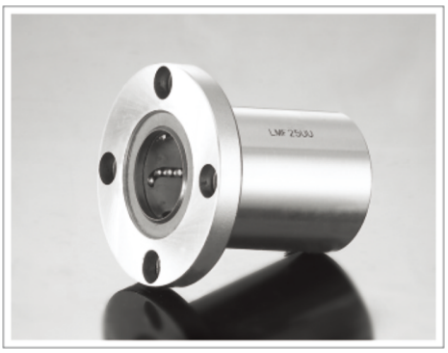

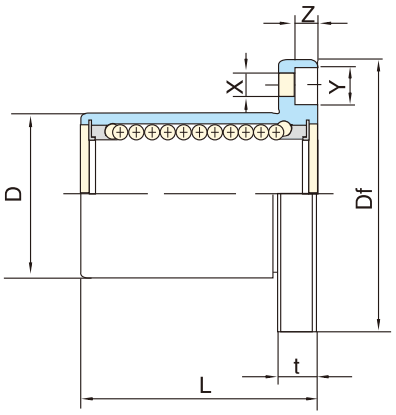


| Nominal shaft diameter (mm) | Part No. | | Weight (g) | Major dimensions and tolerance | | | | | | |
|---|---|---|---|---|---|---|---|---|---|---|
| | Steel | Stainless Steel | | dr | | D | | | L | |
| | **LMF(K)···UU** | **LMSF(K)···UU** | | mm | Tolerance (μm) | mm | Tolerance (μm) | Df mm | mm | Tolerance (μm) |
| 6 | **LMF 6UU**<br>**LMK 6UU** | **LMSF 6UU**<br>**LMSK 6UU** | 24<br>18 | 6 | 0<br>-9 | 12 | 0<br>-13 | 28 | 19 | ± 300 |
| 8 | **LMF 8SUU**<br>**LMK 8SUU** | **LMSF 8SUU**<br>**LMSK 8SUU** | 32<br>24 | 8 | | 15 | | 32 | 17 | |
| 8 | **LMF 8UU**<br>**LMK 8UU** | **LMSF 8UU**<br>**LMSK 8UU** | 37<br>29 | 8 | | 15 | | 32 | 24 | |
| 10 | **LMF 10UU**<br>**LMK 10UU** | **LMSF 10UU**<br>**LMSK 10UU** | 72<br>52 | 10 | | 19 | 0<br>-16 | 40 | 29 | |
| 12 | **LMF 12UU**<br>**LMK 12UU** | **LMSF 12UU**<br>**LMSK 12UU** | 76<br>57 | 12 | | 21 | | 42 | 30 | |
| 13 | **LMF 13UU**<br>**LMK 13UU** | **LMSF 13UU**<br>**LMSK 13UU** | 88<br>72 | 13 | | 23 | | 43 | 32 | |
| 16 | **LMF 16UU**<br>**LMK 16UU** | **LMSF 16UU**<br>**LMSK 16UU** | 120<br>104 | 16 | | 28 | | 48 | 37 | |
| 20 | **LMF 20UU**<br>**LMK 20UU** | **LMSF 20UU**<br>**LMSK 20UU** | 180<br>145 | 20 | 0<br>-10 | 32 | 0<br>-19 | 54 | 42 | |
| 25 | **LMF 25UU**<br>**LMK 25UU** | **LMSF 25UU**<br>**LMSK 25UU** | 340<br>300 | 25 | | 40 | | 62 | 59 | |
| 30 | **LMF 30UU**<br>**LMK 30UU** | **LMSF 30UU**<br>**LMSK 30UU** | 470<br>375 | 30 | | 45 | | 74 | 64 | |
| 35 | **LMF 35UU**<br>**LMK 35UU** | **LMSF 35UU**<br>**LMSK 35UU** | 650<br>560 | 35 | 0<br>-12 | 52 | 0<br>-22 | 82 | 70 | |
| 40 | **LMF 40UU**<br>**LMK 40UU** | **LMSF 40UU**<br>**LMSK 40UU** | 1,060<br>880 | 40 | | 60 | | 96 | 80 | |
| 50 | **LMF 50UU**<br>**LMK 50UU** | **LMSF 50UU**<br>**LMSK 50UU** | 2,200<br>2,000 | 50 | | 80 | | 116 | 100 | |
| 60 | **LMF 60UU**<br>**LMK 60UU** | **LMSF 60UU**<br>**LMSK 60UU** | 3,000<br>2,560 | 60 | 0<br>-15 | 90 | 0<br>-25 | 134 | 110 | |
| 80 | **LMF 80UU**<br>**LMK 80UU** | **-**<br>**-** | 5,800<br>5,300 | 80 | | 120 | | 164 | 140 | |
| 100 | **LMF 100UU**<br>**LMK 100UU** | **-**<br>**-** | 10,600<br>9,900 | 100 | 0<br>-20 | 150 | 0<br>-29 | 200 | 175 | |

**Seal type:**

LMF 10 UU

| | |
|---|---|
| No entry | No seals |
| UU | Seals on both sides |

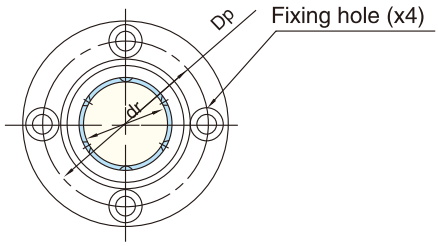


LMF

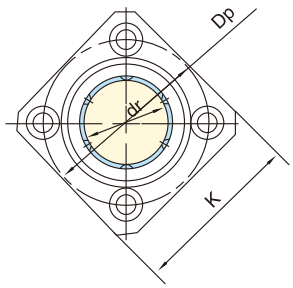


LMK

| Major dimensions and tolerance | | | | | | Eccentricity (μm) | Squareness (μm) | Basic load rating | | Nominal shaft diameter (mm) |
|---|---|---|---|---|---|---|---|---|---|---|
| Flange | | | | | | | | | | |
| K mm | t mm | Dp mm | X mm | Y mm | Z mm | | | dynamic (C N) | static (Co N) | |
| 22 | 5 | 20 | 3.5 | 6 | 3.1 | 12 | 12 | 206 | 265 | 6 |
| 25 | 5 | 24 | 3.5 | 6 | 3.1 | | | 176 | 216 | 8 |
| 25 | 5 | 24 | 3.5 | 6 | 3.1 | | | 274 | 392 | 8 |
| 30 | 6 | 29 | 4.5 | 7.5 | 4.1 | | | 372 | 549 | 10 |
| 32 | 6 | 32 | 4.5 | 7.5 | 4.1 | | | 510 | 784 | 12 |
| 34 | 6 | 33 | 4.5 | 7.5 | 4.1 | | | 510 | 784 | 13 |
| 37 | 6 | 38 | 4.5 | 7.5 | 4.1 | | | 774 | 1,180 | 16 |
| 42 | 8 | 43 | 5.5 | 9 | 5.1 | 15 | 15 | 882 | 1,370 | 20 |
| 50 | 8 | 51 | 5.5 | 9 | 5.1 | | | 980 | 1,570 | 25 |
| 58 | 10 | 60 | 6.6 | 11 | 6.1 | | | 1,570 | 2,740 | 30 |
| 64 | 10 | 67 | 6.6 | 11 | 6.1 | 20 | 20 | 1,670 | 3,140 | 35 |
| 75 | 13 | 78 | 9 | 14 | 8.1 | | | 2,160 | 4,020 | 40 |
| 92 | 13 | 98 | 9 | 14 | 8.1 | | | 3,820 | 7,940 | 50 |
| 106 | 18 | 112 | 11 | 17 | 11.1 | 25 | 25 | 4,700 | 10,000 | 60 |
| 136 | 18 | 142 | 11 | 17 | 11.1 | | | 7,350 | 16,000 | 80 |
| 170 | 20 | 175 | 14 | 20 | 13.1 | 30 | 30 | 14,100 | 34,800 | 100 |

SI Unit 1N ≒ 0.102 kgf

# LMH (Resin retainer) LMSH (Resin retainer)

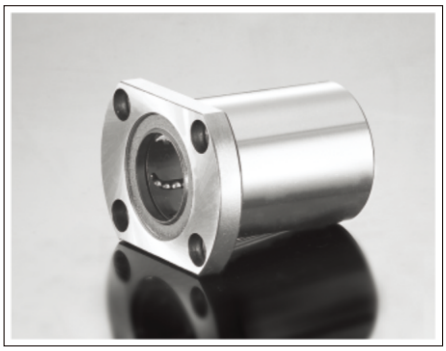

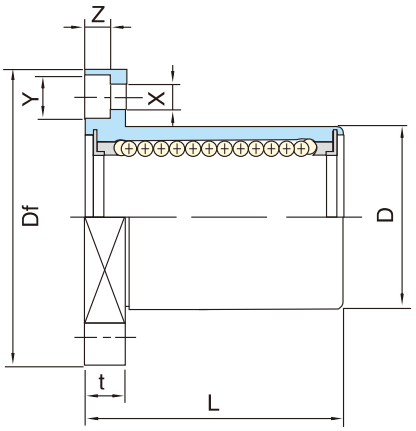


This type is a metric dimension series widely used in Japan and other countries.

| Nominal shaft diameter (mm) | Part No. | | Weight (g) | Major dimensions and tolerance | | | | | | |
|---|---|---|---|---|---|---|---|---|---|---|
| | Steel | Stainless Steel | | dr | | D | | | L | |
| | **LMH···UU** | **LMSH···UU** | | mm | Tolerance ($\mu$m) | mm | Tolerance ($\mu$m) | Df mm | mm | Tolerance ($\mu$m) |
| 6 | **LMH 6UU** | **LMSH 6UU** | 21 | 6 | 0 -9 | 12 | 0 -13 | 28 | 19 | ± 300 |
| 8 | **LMH 8UU** | **LMSH 8UU** | 33 | 8 | | 15 | | 32 | 24 | |
| 10 | **LMH 10UU** | **LMSH 10UU** | 64 | 10 | | 19 | 0 -16 | 40 | 29 | |
| 12 | **LMH 12UU** | **LMSH 12UU** | 68 | 12 | | 21 | | 42 | 30 | |
| 13 | **LMH 13UU** | **LMSH 13UU** | 81 | 13 | | 23 | | 43 | 32 | |
| 16 | **LMH 16UU** | **LMSH 16UU** | 112 | 16 | | 28 | | 48 | 37 | |
| 20 | **LMH 20UU** | **LMSH 20UU** | 167 | 20 | 0 -10 | 32 | 0 -19 | 54 | 42 | |
| 25 | **LMH 25UU** | **LMSH 25UU** | 325 | 25 | | 40 | | 62 | 59 | |
| 30 | **LMH 30UU** | **LMSH 30UU** | 388 | 30 | | 45 | | 74 | 64 | |
| 35 | **LMH 35UU** | **LMSH 35UU** | 524 | 35 | 0 -12 | 52 | 0 -22 | 82 | 70 | |
| 40 | **LMH 40UU** | **LMSH 40UU** | 836 | 40 | | 60 | | 96 | 80 | |
| 50 | **LMH 50UU** | **LMSH 50UU** | 2050 | 50 | 0 -15 | 80 | 0 -25 | 116 | 100 | |

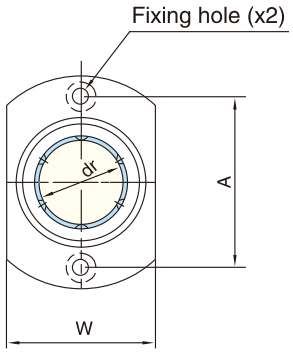


LMH13 or less

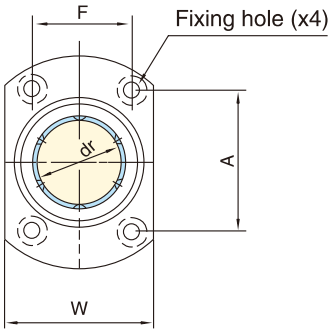


LMH16 or more

| Major dimensions and tolerance | | | | | | | Eccentricity (μm) | Squareness (μm) | Basic load rating | | Nominal shaft diameter (mm) |
|---|---|---|---|---|---|---|---|---|---|---|---|
| Flange | | | | | | | | | | | |
| W mm | t mm | A mm | F mm | X mm | Y mm | Z mm | | | dynamic (C N) | static (Co N) | |
| 18 | 5 | 20 | - | 3.5 | 6 | 3.1 | 12 | 12 | 206 | 265 | 6 |
| 21 | 5 | 24 | - | 3.5 | 6 | 3.1 | | | 274 | 392 | 8 |
| 25 | 6 | 29 | - | 4.5 | 7.5 | 4.1 | | | 372 | 549 | 10 |
| 27 | 6 | 32 | - | 4.5 | 7.5 | 4.1 | | | 510 | 784 | 12 |
| 29 | 6 | 33 | - | 4.5 | 7.5 | 4.1 | | | 510 | 784 | 13 |
| 34 | 6 | 31 | 22 | 4.5 | 7.5 | 4.1 | | | 774 | 1,180 | 16 |
| 38 | 8 | 36 | 24 | 5.5 | 9 | 5.1 | 15 | 15 | 882 | 1,370 | 20 |
| 46 | 8 | 40 | 32 | 5.5 | 9 | 5.1 | | | 980 | 1,570 | 25 |
| 51 | 10 | 49 | 35 | 6.6 | 11 | 6.1 | | | 1,570 | 2,740 | 30 |
| 60 | 10 | 55 | 38 | 6.6 | 11 | 6.1 | 20 | 20 | 1,670 | 3,140 | 35 |
| 70 | 13 | 64 | 45 | 9 | 14 | 8.1 | | | 2,160 | 4,020 | 40 |
| 86 | 13 | 80 | 56 | 9 | 14 | 8.1 | | | 3,820 | 7,940 | 50 |

SI Unit 1N ≒ 0.102 kgf

# LMF-L (Resin retainer) LMK-L (Resin retainer)
# LMSF-L (Resin retainer) LMSK-L (Resin retainer)

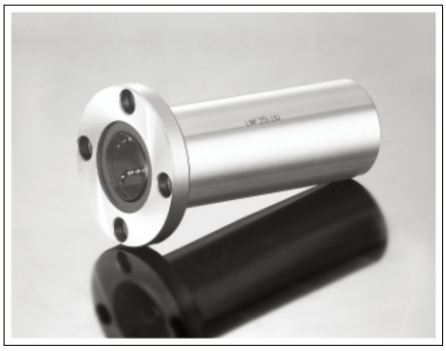

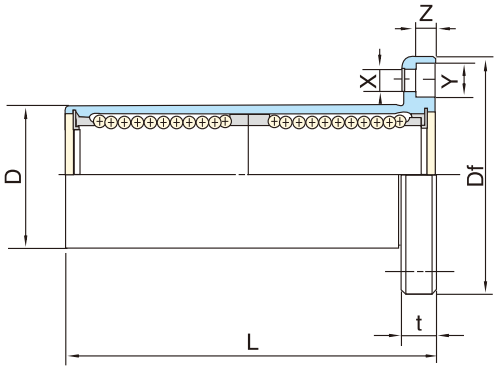


| Nominal shaft diameter (mm) | Part No. | | Weight (g) | Major dimensions and tolerance | | | | | | |
|---|---|---|---|---|---|---|---|---|---|---|
| | Steel | Stainless Steel | | dr | | D | | | L | |
| | **LMF(K)…LUU** | **LMSF(K)…LUU** | | mm | Tolerance (μm) | mm | Tolerance (μm) | Df mm | mm | Tolerance (μm) |
| 6 | **LMF 6LUU**<br>**LMK 6LUU** | **LMSF 6LUU**<br>**LMSK 6LUU** | 31<br>25 | 6 | 0<br>-10 | 12 | 0<br>-13 | 28 | 35 | ± 300 |
| 8 | **LMF 8LUU**<br>**LMK 8LUU** | **LMSF 8LUU**<br>**LMSK 8LUU** | 51<br>43 | 8 | | 15 | | 32 | 45 | |
| 10 | **LMF 10LUU**<br>**LMK 10LUU** | **LMSF 10LUU**<br>**LMSK 10LUU** | 98<br>78 | 10 | | 19 | 0<br>-16 | 40 | 55 | |
| 12 | **LMF 12LUU**<br>**LMK 12LUU** | **LMSF 12LUU**<br>**LMSK 12LUU** | 110<br>90 | 12 | | 21 | | 42 | 57 | |
| 13 | **LMF 13LUU**<br>**LMK 13LUU** | **LMSF 13LUU**<br>**LMSK 13LUU** | 130<br>108 | 13 | | 23 | | 43 | 61 | |
| 16 | **LMF 16LUU**<br>**LMK 16LUU** | **LMSF 16LUU**<br>**LMSK 16LUU** | 190<br>165 | 16 | | 28 | | 48 | 70 | |
| 20 | **LMF 20LUU**<br>**LMK 20LUU** | **LMSF 20LUU**<br>**LMSK 20LUU** | 260<br>225 | 20 | 0<br>-12 | 32 | 0<br>-19 | 54 | 80 | |
| 25 | **LMF 25LUU**<br>**LMK 25LUU** | **LMSF 25LUU**<br>**LMSK 25LUU** | 540<br>500 | 25 | | 40 | | 62 | 112 | |
| 30 | **LMF 30LUU**<br>**LMK 30LUU** | **LMSF 30LUU**<br>**LMSK 30LUU** | 680<br>590 | 30 | | 45 | | 74 | 123 | |
| 35 | **LMF 35LUU**<br>**LMK 35LUU** | **LMSF 35LUU**<br>**LMSK 35LUU** | 1,020<br>930 | 35 | 0<br>-15 | 52 | 0<br>-22 | 82 | 135 | |
| 40 | **LMF 40LUU**<br>**LMK 40LUU** | **LMSF 40LUU**<br>**LMSK 40LUU** | 1,570<br>1,380 | 40 | | 60 | | 96 | 151 | |
| 50 | **LMF 50LUU**<br>**LMK 50LUU** | **LMSF 50LUU**<br>**LMSK 50LUU** | 3,600<br>3,400 | 50 | | 80 | | 116 | 192 | |
| 60 | **LMF 60LUU**<br>**LMK 60LUU** | **LMSF 60LUU**<br>**LMSK 60LUU** | 4,500<br>4,060 | 60 | 0<br>-20 | 90 | 0<br>-25 | 134 | 209 | |
| 80 | **LMF 80LUU**<br>**LMK 80LUU** | — | 9,100<br>8,400 | 80 | | 120 | | 164 | 265 | |
| 100 | **LMF 100LUU**<br>**LMK 100LUU** | — | 17,200<br>14,600 | 100 | | 150 | | 200 | 330 | |

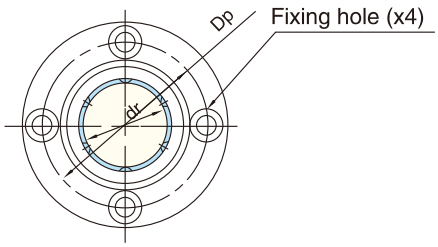


LMF-L

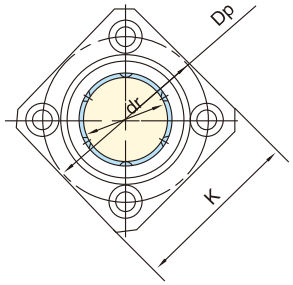


LMK-L

| Major dimensions and tolerance | | | | | | Eccentricity (μm) | Squareness (μm) | Basic load rating | | Nominal shaft diameter (mm) |
|---|---|---|---|---|---|---|---|---|---|---|
| Flange | | | | | | | | | | |
| K mm | t mm | Dp mm | X mm | Y mm | Z mm | | | dynamic (C N) | static (Co N) | |
| 22 | 5 | 20 | 3.5 | 6 | 3.1 | 15 | 15 | 323 | 529 | 6 |
| 25 | 5 | 24 | 3.5 | 6 | 3.1 | | | 431 | 784 | 8 |
| 30 | 6 | 29 | 4.5 | 7.5 | 4.1 | | | 588 | 1,100 | 10 |
| 32 | 6 | 32 | 4.5 | 7.5 | 4.1 | | | 813 | 1,570 | 12 |
| 34 | 6 | 33 | 4.5 | 7.5 | 4.1 | | | 813 | 1,570 | 13 |
| 37 | 6 | 38 | 4.5 | 7.5 | 4.1 | | | 1,230 | 2,350 | 16 |
| 42 | 8 | 43 | 5.5 | 9 | 5.1 | 20 | 20 | 1,400 | 2,740 | 20 |
| 50 | 8 | 51 | 5.5 | 9 | 5.1 | | | 1,560 | 3,140 | 25 |
| 58 | 10 | 60 | 6.6 | 11 | 6.1 | | | 2,490 | 5,490 | 30 |
| 64 | 10 | 67 | 6.6 | 11 | 6.1 | 25 | 25 | 2,650 | 6,270 | 35 |
| 75 | 13 | 78 | 9 | 14 | 8.1 | | | 3,430 | 8,040 | 40 |
| 92 | 13 | 98 | 9 | 14 | 8.1 | | | 6,080 | 15,900 | 50 |
| 106 | 18 | 112 | 11 | 17 | 11.1 | 30 | 30 | 7,550 | 20,000 | 60 |
| 136 | 18 | 142 | 11 | 17 | 11.1 | | | 11,760 | 31,000 | 80 |
| 170 | 20 | 175 | 14 | 20 | 13.1 | | | 19,740 | 48,720 | 100 |

SI Unit 1N ≒ 0.102 kgf

# LMH (Resin retainer) LMSH (Resin retainer)

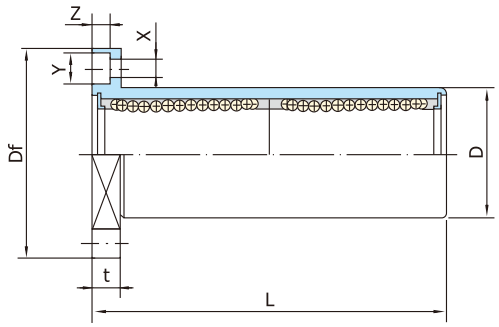


| Nominal shaft diameter (mm) | Part No. | | Weight (g) | Major dimensions and tolerance | | | | | | |
|---|---|---|---|---|---|---|---|---|---|---|
| | Steel | Stainless Steel | | dr | | D | | | L | |
| | **LMH···LUU** | **LMSH···LUU** | | mm | Tolerance (μm) | mm | Tolerance (μm) | Df mm | mm | Tolerance (μm) |
| 6 | **LMH 6LUU** | **LMSH 6LUU** | 28 | 6 | 0 -10 | 12 | 0 -13 | 28 | 35 | ± 300 |
| 8 | **LMH 8LUU** | **LMSH 8LUU** | 47 | 8 | | 15 | | 32 | 45 | |
| 10 | **LMH 10LUU** | **LMSH 10LUU** | 90 | 10 | | 19 | 0 -16 | 40 | 55 | |
| 12 | **LMH 12LUU** | **LMSH 12LUU** | 102 | 12 | | 21 | | 42 | 57 | |
| 13 | **LMH 13LUU** | **LMSH 13LUU** | 123 | 13 | | 23 | | 43 | 61 | |
| 16 | **LMH 16LUU** | **LMSH 16LUU** | 182 | 16 | | 28 | | 48 | 70 | |
| 20 | **LMH 20LUU** | **LMSH 20LUU** | 247 | 20 | 0 -12 | 32 | 0 -19 | 54 | 80 | |
| 25 | **LMH 25LUU** | **LMSH 25LUU** | 525 | 25 | | 40 | | 62 | 112 | |
| 30 | **LMH 30LUU** | **LMSH 30LUU** | 645 | 30 | | 45 | | 74 | 125 | |
| 35 | **LMH 35LUU** | **LMSH 35LUU** | 870 | 35 | | 52 | | 82 | 135 | |
| 40 | **LMH 40LUU** | **LMSH 40LUU** | 1380 | 40 | | 60 | | 96 | 151 | |
| 50 | **LMH 50LUU** | **LMSH 50LUU** | 3450 | 50 | 0 -15 | 80 | 0 -22 | 116 | 192 | |

Note: All sizes of LMH type are sealed on both sides.

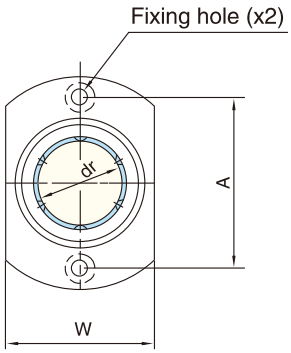


LMH13 or less

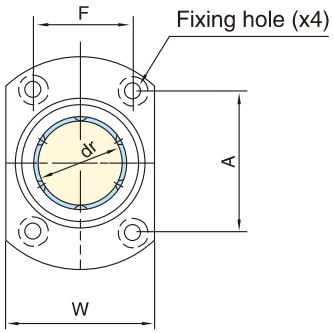


LMH16 or more

| Major dimensions and tolerance | | | | | | | Eccentricity (μm) | Squareness (μm) | Basic load rating | | Nominal shaft diameter (mm) |
|---|---|---|---|---|---|---|---|---|---|---|---|
| Flange | | | | | | | | | | | |
| W mm | t mm | A mm | F mm | X mm | Y mm | Z mm | | | dynamic (C N) | static (Co N) | |
| 18 | 5 | 20 | - | 3.5 | 6 | 3.1 | 15 | 15 | 323 | 529 | 6 |
| 21 | 5 | 24 | - | 3.5 | 6 | 3.1 | | | 431 | 784 | 8 |
| 25 | 6 | 29 | - | 4.5 | 7.5 | 4.1 | | | 588 | 1,100 | 10 |
| 27 | 6 | 32 | - | 4.5 | 7.5 | 4.1 | | | 813 | 1,570 | 12 |
| 29 | 6 | 33 | - | 4.5 | 7.5 | 4.1 | | | 813 | 1,570 | 13 |
| 34 | 6 | 31 | 22 | 4.5 | 7.5 | 4.1 | | | 1,230 | 2,350 | 16 |
| 38 | 8 | 36 | 24 | 5.5 | 9 | 5.1 | 20 | 20 | 1,400 | 2,740 | 20 |
| 46 | 8 | 40 | 32 | 5.5 | 9 | 5.1 | | | 1,560 | 3,140 | 25 |
| 51 | 10 | 49 | 35 | 6.6 | 11 | 6.1 | | | 2,490 | 5,490 | 30 |
| 60 | 10 | 55 | 38 | 6.6 | 11 | 6.1 | | | 2,650 | 6,270 | 35 |
| 70 | 13 | 64 | 45 | 9 | 14 | 8.1 | | | 3,430 | 8,040 | 40 |
| 86 | 13 | 80 | 56 | 9 | 14 | 8.1 | | | 6,080 | 15,900 | 50 |

SI Unit 1N ≒ 0.102 kgf

# LMEF (Resin retainer) LMEK (Resin retainer)
# LMESF (Resin retainer) LMESK (Resin retainer)

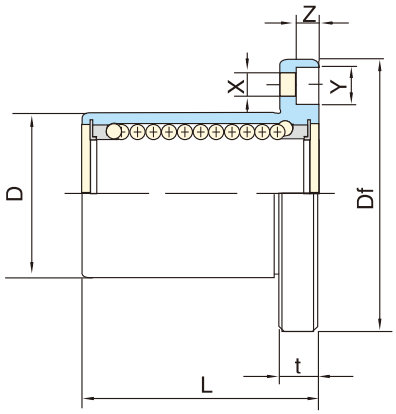


| Nominal shaft diameter (mm) | Part No. | | Weight (g) | Major dimensions and tolerance | | | | | | |
|---|---|---|---|---|---|---|---|---|---|---|
| | Steel | Stainless Steel | | dr | | D | | | L | |
| | **LMEF(K)···UU** | **LMESF(K)···UU** | | mm | Tolerance (μm) | mm | Tolerance (μm) | Df mm | mm | Tolerance (μm) |
| 8 | **LMEF 8UU**<br>**LMEK 8UU** | **LMESF 8UU**<br>**LMESK 8UU** | 41<br>33 | 8 | +8<br>0 | 16 | 0<br>-13 | 32 | 25 | ± 300 |
| 12 | **LMEF 12UU**<br>**LMEK 12UU** | **LMESF 12UU**<br>**LMESK 12UU** | 80<br>64 | 12 | | 22 | 0<br>-16 | 42 | 32 | |
| 16 | **LMEF 16UU**<br>**LMEK 16UU** | **LMESF 16UU**<br>**LMESK 16UU** | 103<br>90 | 16 | +9<br>-1 | 26 | | 46 | 36 | |
| 20 | **LMEF 20UU**<br>**LMEK 20UU** | **LMESF 20UU**<br>**LMESK 20UU** | 182<br>147 | 20 | | 32 | 0<br>-19 | 54 | 45 | |
| 25 | **LMEF 25UU**<br>**LMEK 25UU** | **LMESF 25UU**<br>**LMESK 25UU** | 335<br>295 | 25 | +11<br>-1 | 40 | | 62 | 58 | |
| 30 | **LMEF 30UU**<br>**LMEK 30UU** | **LMESF 30UU**<br>**LMESK 30UU** | 560<br>465 | 30 | | 47 | | 76 | 68 | |
| 40 | **LMEF 40UU**<br>**LMEK 40UU** | **LMESF 40UU**<br>**LMESK 40UU** | 1,175<br>975 | 40 | +13<br>-2 | 62 | 0<br>-22 | 98 | 80 | |
| 50 | **LMEF 50UU**<br>**LMEK 50UU** | **LMESF 50UU**<br>**LMESK 50UU** | 1,745<br>1,545 | 50 | | 75 | | 112 | 100 | |
| 60 | **LMEF 60UU**<br>**LMEK 60UU** | **LMESF 60UU**<br>**LMESK 60UU** | 3,220<br>2,780 | 60 | | 90 | 0<br>-25 | 134 | 125 | |
| 80 | **LMEF 80UU**<br>**LMEK 80UU** | — | 6,420<br>5,920 | 80 | +16<br>-4 | 120 | | 164 | 165 | |

**Seal type:**

LMEF 80 UU

| | |
|---|---|
| No entry | No seals |
| UU | Seals on both sides |

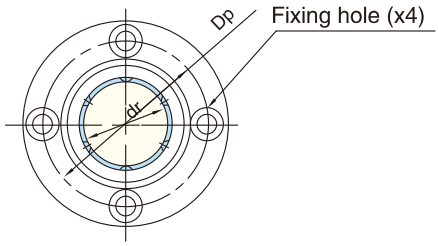


LMEF

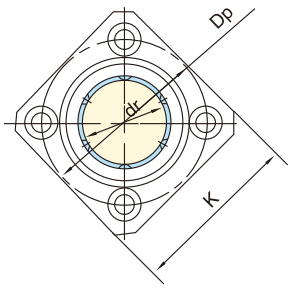


LMEK

| Major dimensions and tolerance | | | | | | Eccentricity (μm) | Squareness (μm) | Basic load rating | | Nominal shaft diameter (mm) |
|---|---|---|---|---|---|---|---|---|---|---|
| Flange | | | | | | | | | | |
| K mm | t mm | Dp mm | X mm | Y mm | Z mm | | | dynamic (C N) | static (Co N) | |
| 25 | 5 | 24 | 3.5 | 6 | 3.1 | 12 | 12 | 265 | 402 | 8 |
| 32 | 6 | 32 | 4.5 | 7.5 | 4.1 | | | 510 | 784 | 12 |
| 35 | 6 | 36 | 4.5 | 7.5 | 4.1 | | | 578 | 892 | 16 |
| 42 | 8 | 43 | 5.5 | 9 | 5.1 | | | 862 | 1,370 | 20 |
| 50 | 8 | 51 | 5.5 | 9 | 5.1 | 15 | 15 | 980 | 1,570 | 25 |
| 60 | 10 | 62 | 6.6 | 11 | 6.1 | | | 1,570 | 2,740 | 30 |
| 75 | 13 | 80 | 9 | 14 | 8.1 | | | 2,160 | 4,020 | 40 |
| 88 | 13 | 94 | 9 | 14 | 8.1 | 17 | 17 | 3,820 | 7,940 | 50 |
| 106 | 18 | 112 | 11 | 17 | 11.1 | | | 4,700 | 9,800 | 60 |
| 136 | 18 | 142 | 11 | 17 | 11.1 | 20 | 20 | 7,350 | 16,000 | 80 |

SI Unit 1N ≒ 0.102 kgf

# LMEF-L (Resin retainer)
# LMESF-L (Resin retainer)

# LMEK-L (Resin retainer)
# LMESK-L (Resin retainer)

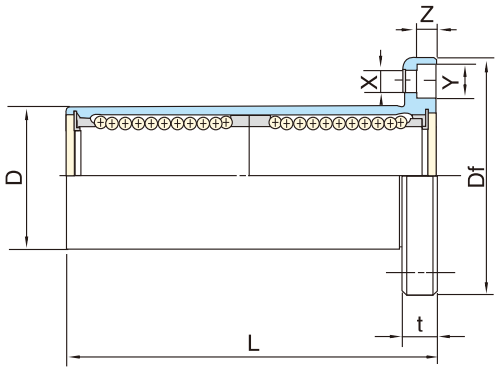


| Nominal shaft diameter (mm) | Part No. | | Weight (g) | Major dimensions and tolerance | | | | | | |
|---|---|---|---|---|---|---|---|---|---|---|
| | Steel | Stainless Steel | | dr | | D | | | L | |
| | **LMEF(K)…LUU** | **LMESF(K)…LUU** | | mm | Tolerance (μm) | mm | Tolerance (μm) | Df mm | mm | Tolerance (μm) |
| 8 | **LMEF 8LUU**<br>**LMEK 8LUU** | **LMESF 8LUU**<br>**LMESK 8LUU** | 59<br>51 | 8 | +9<br>-1 | 16 | 0<br>-13 | 32 | 46 | ± 300 |
| 12 | **LMEF 12LUU**<br>**LMEK 12LUU** | **LMESF 12LUU**<br>**LMESK 12LUU** | 110<br>90 | 12 | | 22 | 0<br>-16 | 42 | 61 | |
| 16 | **LMEF 16LUU**<br>**LMEK 16LUU** | **LMESF 16LUU**<br>**LMESK 16LUU** | 160<br>135 | 16 | +11<br>-1 | 26 | | 46 | 68 | |
| 20 | **LMEF 20LUU**<br>**LMEK 20LUU** | **LMESF 20LUU**<br>**LMESK 20LUU** | 260<br>225 | 20 | | 32 | 0<br>-19 | 54 | 80 | |
| 25 | **LMEF 25LUU**<br>**LMEK 25LUU** | **LMESF 25LUU**<br>**LMESK 25LUU** | 540<br>500 | 25 | +13<br>-2 | 40 | | 62 | 112 | |
| 30 | **LMEF 30LUU**<br>**LMEK 30LUU** | **LMESF 30LUU**<br>**LMESK 30LUU** | 815<br>720 | 30 | | 47 | | 76 | 123 | |
| 40 | **LMEF 40LUU**<br>**LMEK 40LUU** | **LMESF 40LUU**<br>**LMESK 40LUU** | 1,805<br>1,600 | 40 | +16<br>-4 | 62 | 0<br>-22 | 98 | 151 | |
| 50 | **LMEF 50LUU**<br>**LMEK 50LUU** | **LMESF 50LUU**<br>**LMESK 50LUU** | 2,820<br>2,620 | 50 | | 75 | | 112 | 192 | |
| 60 | **LMEF 60LUU**<br>**LMEK 60LUU** | **LMESF 60LUU**<br>**LMESK 60LUU** | 4,920<br>4,480 | 60 | | 90 | 0<br>-25 | 134 | 209 | |

**Seal type:**

LMEF 20L UU

| | |
|---|---|
| No entry | No seals |
| UU | Seals on both sides |

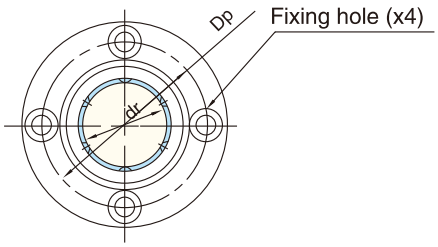


LMEF-L

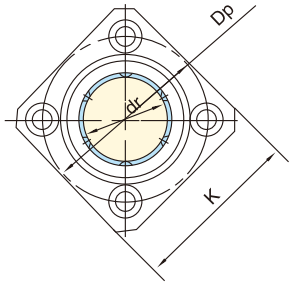


LMEK-L

| Major dimensions and tolerance | | | | | | Eccentricity (μm) | Squareness (μm) | Basic load rating | | Nominal shaft diameter (mm) |
|---|---|---|---|---|---|---|---|---|---|---|
| Flange | | | | | | | | | | |
| K mm | t mm | Dp mm | X mm | Y mm | Z mm | | | dynamic (C N) | static (Co N) | |
| 25 | 5 | 24 | 3.5 | 6 | 3.1 | 15 | 15 | 421 | 804 | 8 |
| 32 | 6 | 32 | 4.5 | 7.5 | 4.1 | | | 813 | 1570 | 12 |
| 35 | 6 | 36 | 4.5 | 7.5 | 4.1 | | | 921 | 1780 | 16 |
| 42 | 8 | 43 | 5.5 | 9 | 5.1 | 17 | 17 | 1,370 | 2,740 | 20 |
| 50 | 8 | 51 | 5.5 | 9 | 5.1 | | | 1,570 | 3,140 | 25 |
| 60 | 10 | 62 | 6.6 | 11 | 6.1 | | | 2,500 | 5,490 | 30 |
| 75 | 13 | 80 | 9 | 14 | 8.1 | 20 | 20 | 3,430 | 8,040 | 40 |
| 88 | 13 | 94 | 9 | 14 | 8.1 | | | 6,080 | 15,900 | 50 |
| 106 | 18 | 112 | 11 | 17 | 11.1 | 25 | 25 | 7,550 | 20,000 | 60 |

SI Unit 1N ≒ 0.102 kgf

# LMBF (Resin retainer) LMBK (Resin retainer)
# LMBSF (Resin retainer) LMBSK (Resin retainer)

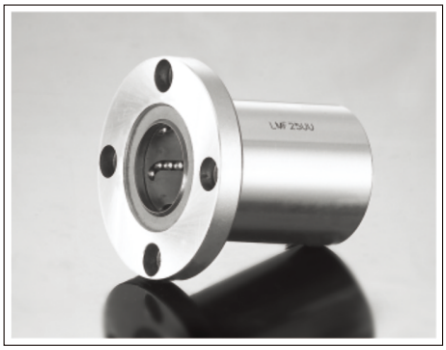

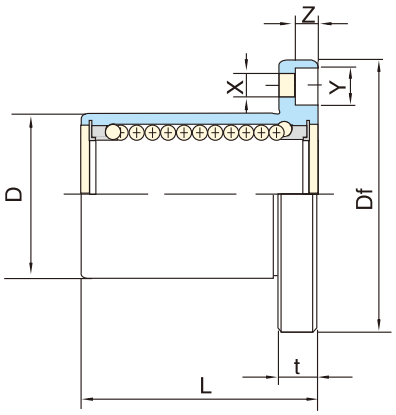


| Nominal shaft diameter (mm) | Part No. Steel LMBF(K)···UU | Part No. Stainless Steel LMBSF(K)···UU | Weight (g) | Major dimensions and tolerance: dr Inch/mm | dr Tolerance (Inch/μm) | D Inch/mm | D Tolerance (Inch/μm) | Df Inch/mm | L Inch/mm | L Tolerance (Inch/μm) |
|---|---|---|---|---|---|---|---|---|---|---|
| **1/4<br>6.350** | **LMBF 4UU<br>LMBK 4UU** | **LMBSF 4UU<br>LMBSK 4UU** | 32<br>25 | .2500<br>6.350 | 0<br>-.00040<br>0<br>-9 | .5000<br>12.700 | 0<br>-.00050<br>0<br>-13 | 1.2500<br>31.750 | .7500<br>19.050 | ± .012<br>± 300 |
| **3/8<br>9.525** | **LMBF 6UU<br>LMBK 6UU** | **LMBSF 6UU<br>LMBSK 6UU** | 47<br>32 | .3750<br>9.525 | | .6250<br>15.875 | 0<br>-.00065<br>0<br>-16 | 1.5000<br>38.100 | .8750<br>22.225 | |
| **1/2<br>12.700** | **LMBF 8UU<br>LMBK 8UU** | **LMBSF 8UU<br>LMBSK 8UU** | 88<br>68 | .5000<br>12.700 | | .8750<br>22.225 | | 1.7500<br>44.450 | 1.2500<br>31.750 | |
| **5/8<br>15.875** | **LMBF 10UU<br>LMBK 10UU** | **LMBSF 10UU<br>LMBSK 10UU** | 140<br>124 | .6250<br>15.875 | | 1.1250<br>28.575 | | 2.0000<br>50.800 | 1.5000<br>38.100 | |
| **3/4<br>19.050** | **LMBF 12UU<br>LMBK 12UU** | **LMBSF 12UU<br>LMBSK 12UU** | 190<br>150 | .7500<br>19.050 | 0<br>-.00040<br>0<br>-10 | 1.2500<br>31.750 | 0<br>-.00075<br>0<br>-19 | 2.1875<br>55.563 | 1.6250<br>41.275 | |
| **1<br>24.400** | **LMBF 16UU<br>LMBK 16UU** | **LMBSF 16UU<br>LMBSK 16UU** | 325<br>280 | 1.0000<br>25.400 | | 1.5625<br>39.688 | | 2.5000<br>63.500 | 2.2500<br>57.150 | |
| **1-1/4<br>31.750** | **LMBF 20UU<br>LMBK 20UU** | **LMBSF 20UU<br>LMBSK 20UU** | 665<br>580 | 1.2500<br>31.750 | 0<br>-.00050<br>0<br>-12 | 2.0000<br>50.800 | 0<br>-.00090<br>0<br>-22 | 3.1250<br>79.375 | 2.6250<br>66.675 | |
| **1-1/2<br>38.100** | **LMBF 24UU<br>LMBK 24UU** | **LMBSF 24UU<br>LMBSK 24UU** | 1,100<br>930 | 1.5000<br>38.100 | | 2.3750<br>60.325 | | 3.7500<br>95.250 | 3.0000<br>76.200 | |
| **2<br>50.800** | **LMBF 32UU<br>LMBK 32UU** | **LMBSF 32UU<br>LMBSK 32UU** | 1,760<br>1,580 | 2.0000<br>50.800 | | 3.0000<br>76.200 | 0<br>-.00100<br>0<br>-25 | 4.3750<br>111.125 | 4.0000<br>101.600 | |
| **2-1/2<br>63.500** | **LMBF 40UU<br>LMBK 40UU** | — | 3,570<br>3,200 | 2.5000<br>63.500 | 0<br>-.00060<br>0<br>-15 | 3.7500<br>95.250 | | 5.3750<br>136.525 | 5.0000<br>127.000 | |
| **3<br>76.200** | **LMBF 48UU<br>LMBK 48UU** | — | 5,600<br>5,000 | 3.0000<br>76.200 | | 4.5000<br>114.300 | | 6.1250<br>155.575 | 6.0000<br>152.400 | |
| **4<br>101.600** | **LMBF 64UU<br>LMBK 64UU** | — | 12,000<br>11,300 | 4.0000<br>101.600 | 0<br>-.00080<br>0<br>-20 | 6.0000<br>152.400 | 0<br>-.00115<br>0<br>-29 | 8.0000<br>203.200 | 8.0000<br>203.200 | |

**Seal type:**

LMBF 10 UU

| | |
|---|---|
| No entry | No seals |
| UU | Seals on both sides |

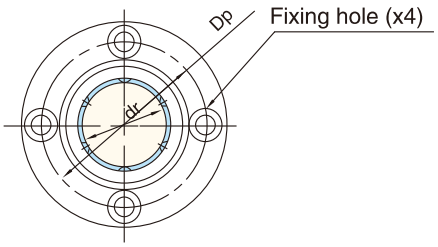


LMBF

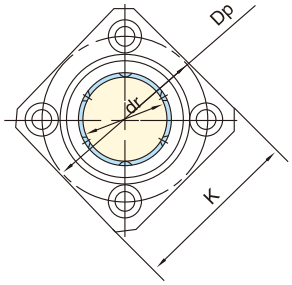


LMBK

| Major dimensions and tolerance | | | | | | Eccentricity (Inch/$\mu$m) | Squareness (Inch/$\mu$m) | Basic load rating | | Nominal shaft diameter (Inch/mm) |
|---|---|---|---|---|---|---|---|---|---|---|
| Flange | | | | | | | | | | |
| K Inch/mm | t Inch/mm | Dp Inch/mm | X Inch/mm | Y Inch/mm | Z Inch/mm | | | dynamic (C N) | static (Co N) | |
| 1.0000<br>25.400 | 0.219<br>5.556 | .8750<br>22.225 | .1560<br>3.969 | .2500<br>6.350 | .1410<br>3.572 | .0005<br>12 | .0005<br>12 | 206 | 265 | **1/4<br>6.350** |
| 1.2500<br>31.750 | .2500<br>6.350 | 1.0620<br>26.988 | .1875<br>4.763 | .2970<br>7.541 | .1720<br>4.366 | | | 225 | 314 | **3/8<br>9.525** |
| 1.3750<br>34.925 | .2500<br>6.350 | 1.312<br>33.338 | .1875<br>4.763 | .2970<br>7.541 | .1720<br>4.366 | | | 510 | 784 | **1/2<br>12.700** |
| 1.5000<br>38.100 | .2500<br>6.350 | 1.5620<br>39.688 | .1875<br>4.763 | .2970<br>7.541 | .1720<br>4.366 | | | 774 | 1,180 | **5/8<br>15.875** |
| 1.6875<br>42.863 | .3125<br>7.938 | 1.7180<br>43.660 | .2187<br>5.556 | .3440<br>8.731 | .2030<br>5.159 | .0006<br>15 | .0006<br>15 | 862 | 1,370 | **3/4<br>19.050** |
| 2.0000<br>50.800 | .3125<br>7.938 | 2.0310<br>51.594 | .2187<br>5.556 | .3440<br>8.731 | .2030<br>5.159 | | | 980 | 1,570 | **1<br>24.400** |
| 2.5000<br>63.500 | .3750<br>9.525 | 2.5625<br>65.088 | .2812<br>7.144 | .4060<br>10.319 | .2656<br>6.747 | .0008<br>20 | .0008<br>20 | 1,570 | 2,740 | **1-1/4<br>31.750** |
| 3.0000<br>76.200 | .5000<br>12.700 | 3.0625<br>77.788 | .3440<br>8.731 | .5000<br>12.700 | .3280<br>8.334 | | | 2,180 | 4,020 | **1-1/2<br>38.100** |
| 3.5000<br>88.900 | .5000<br>12.700 | 3.6875<br>93.662 | .3440<br>8.731 | .5000<br>12.700 | .3280<br>8.334 | .0010<br>25 | .0010<br>25 | 3,820 | 7,940 | **2<br>50.800** |
| 4.3750<br>111.125 | .7500<br>19.050 | 4.5625<br>115.887 | .4062<br>10.319 | .6250<br>15.875 | .3750<br>9.525 | | | 4,700 | 10,000 | **2-1/2<br>63.500** |
| 5.0000<br>127.000 | .7500<br>19.050 | 5.3125<br>134.937 | .4062<br>10.319 | .6250<br>15.875 | .3750<br>9.525 | | | 7,350 | 16,000 | **3<br>76.200** |
| 6.7500<br>171.450 | .8750<br>22.225 | 7.0000<br>177.800 | .5000<br>12.700 | .7125<br>18.097 | .5000<br>12.700 | .0012<br>30 | .0012<br>30 | 14,100 | 34,800 | **4<br>101.600** |

SI Unit 1N ≒ 0.225 lbs
1kg ≒ 2.205 lbs

# LMFP-UU(Resin retainer)
# LMKP-UU(Resin retainer)

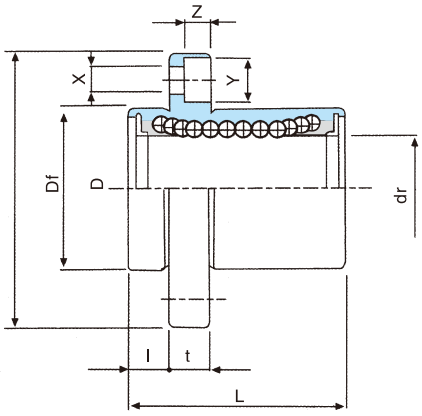


| Nominal shaft diameter mm | Part No. | | Major dimensions and tolerance | | | | | | | | |
|---|---|---|---|---|---|---|---|---|---|---|---|
| | LMFP…UU | LMKP…UU | dr | | D | | L | | Flange | | |
| | | | mm | Tolerance μm | mm | Tolerance μm | mm | Tolerance μm | l mm | Df mm | K mm |
| 6 | **LMFP6UU** | **LMKP6UU** | 6 | 0 -9 | 12 | 0 -13 | 19 | ±300 | 5 | 28 | 22 |
| 8 | **LMFP8UU** | **LMKP8UU** | 8 | | 15 | | 24 | | 5 | 32 | 25 |
| 10 | **LMFP10UU** | **LMKP10UU** | 10 | | 19 | 0 -16 | 29 | | 6 | 40 | 30 |
| 12 | **LMFP12UU** | **LMKP12UU** | 12 | | 21 | | 30 | | 6 | 42 | 32 |
| 13 | **LMFP13UU** | **LMKP13UU** | 13 | | 23 | | 32 | | 6 | 43 | 34 |
| 16 | **LMFP16UU** | **LMKP16UU** | 16 | | 28 | | 37 | | 6 | 48 | 37 |
| 20 | **LMFP20UU** | **LMKP20UU** | 20 | 0 -10 | 32 | 0 -19 | 42 | | 8 | 54 | 42 |
| 25 | **LMFP25UU** | **LMKP25UU** | 25 | | 40 | | 59 | | 8 | 62 | 50 |
| 30 | **LMFP30UU** | **LMKP30UU** | 30 | | 45 | | 64 | | 10 | 74 | 58 |
| 35 | **LMFP35UU** | **LMKP35UU** | 35 | 0 -12 | 52 | 0 -22 | 70 | | 10 | 82 | 64 |
| 40 | **LMFP40UU** | **LMKP40UU** | 40 | | 60 | | 80 | | 13 | 96 | 75 |
| 50 | **LMFP50UU** | **LMKP50UU** | 50 | | 80 | | 100 | | 13 | 116 | 92 |
| 60 | **LMFP60UU** | **LMKP60UU** | 60 | 0 -15 | 90 | 0 -25 | 110 | | 18 | 134 | 106 |

Note:All sizes of LMF-E/LMK-E type are sealed on both sides.

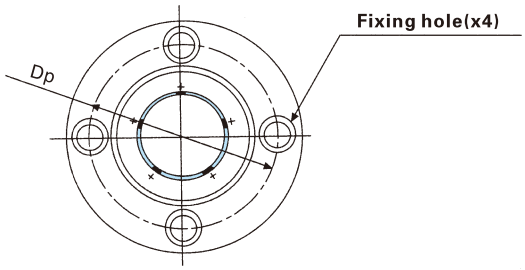


LMFP…UU

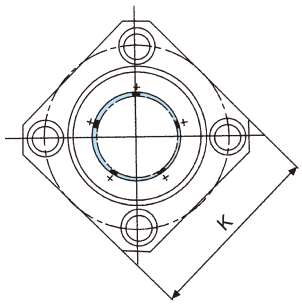


LMKP…UU

| Major dimensions and tolerance | | | | | Eccentricity | Squareness | Basic load rating | | Weight | Nominal shaft diameter |
|---|---|---|---|---|---|---|---|---|---|---|
| Flange | | | | | | | | | | |
| t mm | Dp mm | X mm | Y mm | Z mm | μm | μm | Dynamic C(N) | Static Co(N) | g | mm |
| 5 | 20 | 3.5 | 6.5 | 3.1 | 12 | 12 | 206 | 265 | 24<br>18 | 6 |
| 5 | 24 | 3.5 | 6.5 | 3.1 | | | 274 | 392 | 37<br>29 | 8 |
| 6 | 29 | 4.5 | 8 | 4.1 | | | 372 | 549 | 72<br>52 | 10 |
| 6 | 32 | 4.5 | 8 | 4.1 | | | 510 | 784 | 76<br>57 | 12 |
| 6 | 33 | 4.5 | 8 | 4.1 | | | 510 | 784 | 88<br>72 | 13 |
| 6 | 38 | 4.5 | 8 | 4.1 | | | 774 | 1,180 | 120<br>104 | 16 |
| 8 | 43 | 5.5 | 9.5 | 5.1 | 15 | 15 | 882 | 1,370 | 180<br>145 | 20 |
| 8 | 51 | 5.5 | 9.5 | 5.1 | | | 980 | 1,570 | 340<br>300 | 25 |
| 10 | 60 | 6.6 | 11 | 6.1 | | | 1,570 | 2,740 | 470<br>375 | 30 |
| 10 | 67 | 6.6 | 11 | 6.1 | 20 | 20 | 1,670 | 3,140 | 650<br>560 | 35 |
| 13 | 78 | 9 | 14 | 8.1 | | | 2,160 | 4,020 | 1,060<br>880 | 40 |
| 13 | 98 | 9 | 14 | 8.1 | | | 3,820 | 7,940 | 2,200<br>2,000 | 50 |
| 18 | 112 | 11 | 17.5 | 11.1 | 25 | 25 | 4,700 | 10,000 | 3,000<br>2,560 | 60 |

SI Unit 1N ≒ 0.102 kgf

# LMHP-UU(Resin retainer)

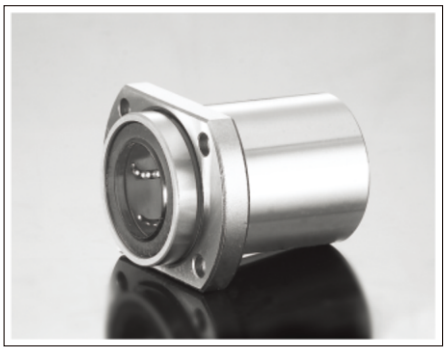

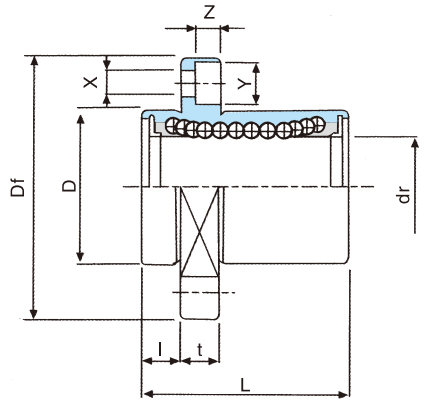


| Nominal shaft diameter mm | Part No. | Major dimensions and tolerance | | | | | | | | | |
|---|---|---|---|---|---|---|---|---|---|---|---|
| | LMHP…UU | dr | | D | | L | | Flange | | | |
| | | mm | Tolerance μm | mm | Tolerance μm | mm | Tolerance μm | l mm | Df mm | W mm | t mm |
| 6 | **LMHP6UU** | 6 | 0 -9 | 12 | 0 -13 | 19 | ±300 | 5 | 28 | 18 | 5 |
| 8 | **LMHP8UU** | 8 | | 15 | | 24 | | 5 | 32 | 21 | 5 |
| 10 | **LMHP10UU** | 10 | | 19 | 0 -16 | 29 | | 6 | 40 | 25 | 6 |
| 12 | **LMHP12UU** | 12 | | 21 | | 30 | | 6 | 42 | 27 | 6 |
| 13 | **LMHP13UU** | 13 | | 23 | | 32 | | 6 | 43 | 29 | 6 |
| 16 | **LMHP16UU** | 16 | | 28 | | 37 | | 6 | 48 | 34 | 6 |
| 20 | **LMHP20UU** | 20 | 0 -10 | 32 | 0 -19 | 42 | | 8 | 54 | 38 | 8 |
| 25 | **LMHP25UU** | 25 | | 40 | | 59 | | 8 | 62 | 46 | 8 |
| 30 | **LMHP30UU** | 30 | | 45 | | 64 | | 10 | 74 | 51 | 10 |
| 35 | **LMHP35UU** | 35 | | 52 | | 70 | | 10 | 82 | 60 | 10 |
| 40 | **LMHP40UU** | 40 | | 60 | | 80 | | 13 | 96 | 70 | 13 |
| 50 | **LMHP50UU** | 50 | 0 -15 | 80 | 0 -22 | 100 | | 13 | 116 | 86 | 18 |

Note:All sizes of LMHP type are sealed on both sides.

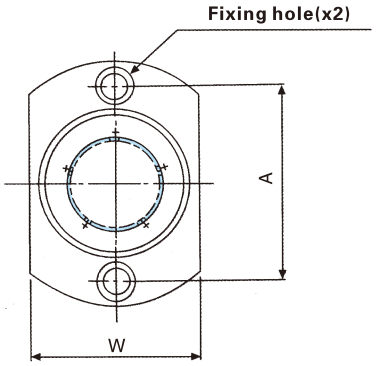


LMHP 13 or less

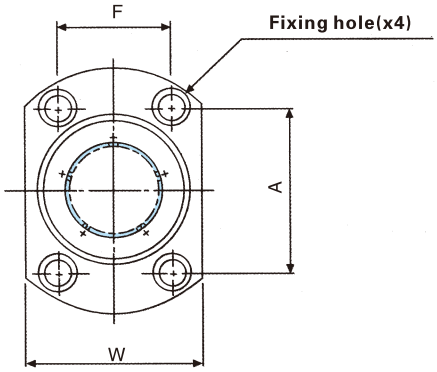


LMHP 16 or more

| Major dimensions and tolerance | | | | | Eccentricity | Squareness | Basic load rating | | Weight | Nominal shaft diameter |
|---|---|---|---|---|---|---|---|---|---|---|
| Flange | | | | | | | | | | |
| A mm | F mm | X mm | Y mm | Z mm | μ m | μ m | Dynamic C(N) | Static Co(N) | g | mm |
| 20 | - | 3.5 | 6.5 | 3.1 | 12 | 12 | 206 | 265 | 21 | 6 |
| 24 | - | 3.5 | 6.5 | 3.1 | | | 274 | 392 | 33 | 8 |
| 29 | - | 4.5 | 8 | 4.1 | | | 372 | 549 | 64 | 10 |
| 32 | - | 4.5 | 8 | 4.1 | | | 510 | 784 | 68 | 12 |
| 33 | - | 4.5 | 8 | 4.1 | | | 510 | 784 | 81 | 13 |
| 31 | 22 | 4.5 | 8 | 4.1 | | | 774 | 1,180 | 112 | 16 |
| 36 | 24 | 5.5 | 9.5 | 5.1 | 15 | 15 | 882 | 1,370 | 167 | 20 |
| 40 | 32 | 5.5 | 9.5 | 5.1 | | | 980 | 1,570 | 325 | 25 |
| 49 | 35 | 6.6 | 11 | 6.1 | | | 1,570 | 2,740 | 388 | 30 |
| 55 | 35 | 6.6 | 11 | 6.1 | 20 | 20 | 1,670 | 3,140 | 524 | 35 |
| 64 | 45 | 9 | 14 | 8.1 | | | 2,160 | 4,020 | 828 | 40 |
| 80 | 56 | 9 | 14 | 8.1 | | | 3,820 | 7,940 | 2050 | 50 |

SI Unit 1N ≒ 0.102 kgf

# LMFP-LUU(Resin retainer)
# LMKP-LUU(Resin retainer)

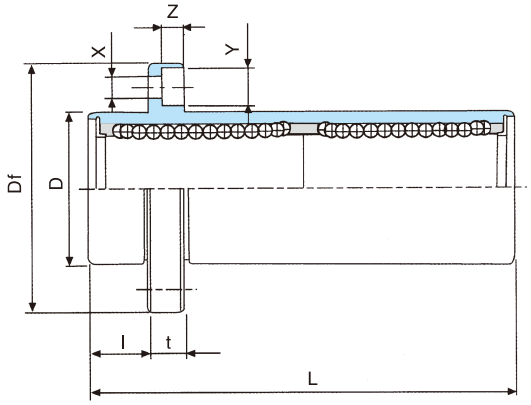


| Nominal shaft diameter mm | Part No. | | Major dimensions and tolerance | | | | | | | | |
|---|---|---|---|---|---|---|---|---|---|---|---|
| | LMFP…LUU | LMKP…LUU | dr | | D | | L | | Flange | | |
| | | | mm | Tolerance μm | mm | Tolerance μm | mm | Tolerance μm | l mm | Df mm | K mm |
| 6 | **LMFP6LUU** | **LMKP6LUU** | 6 | 0 -10 | 12 | 0 -13 | 35 | ±300 | 5 | 28 | 22 |
| 8 | **LMFP8LUU** | **LMKP8LUU** | 8 | | 15 | | 45 | | 5 | 32 | 25 |
| 10 | **LMFP10LUU** | **LMKP10LUU** | 10 | | 19 | 0 -16 | 55 | | 6 | 40 | 30 |
| 12 | **LMFP12LUU** | **LMKP12LUU** | 12 | | 21 | | 57 | | 6 | 42 | 32 |
| 13 | **LMFP13LUU** | **LMKP13LUU** | 13 | | 23 | | 61 | | 6 | 43 | 34 |
| 16 | **LMFP16LUU** | **LMKP16LUU** | 16 | | 28 | | 70 | | 6 | 48 | 37 |
| 20 | **LMFP20LUU** | **LMKP20LUU** | 20 | 0 -12 | 32 | 0 -19 | 80 | | 8 | 54 | 42 |
| 25 | **LMFP25LUU** | **LMKP25LUU** | 25 | | 40 | | 112 | | 8 | 62 | 50 |
| 30 | **LMFP30LUU** | **LMKP30LUU** | 30 | | 45 | | 123 | | 10 | 74 | 58 |
| 35 | **LMFP35LUU** | **LMKP35LUU** | 35 | 0 -15 | 52 | 0 -22 | 135 | | 10 | 82 | 64 |
| 40 | **LMFP40LUU** | **LMKP40LUU** | 40 | | 60 | | 151 | | 13 | 96 | 75 |
| 50 | **LMFP50LUU** | **LMKP50LUU** | 50 | | 80 | | 192 | | 13 | 116 | 92 |
| 60 | **LMFP60LUU** | **LMKP60LUU** | 60 | 0 -20 | 90 | 0 -25 | 209 | | 18 | 134 | 106 |

Note:All sizes of LMFP/LMKP type are sealed on both sides.

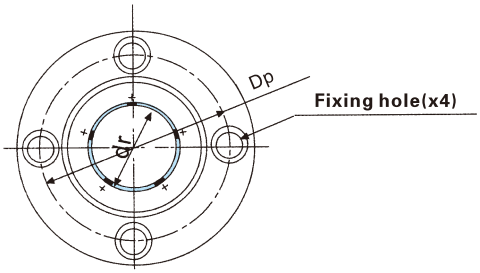


LMFP…LUU

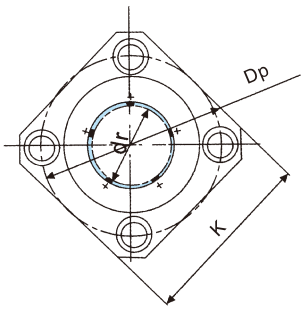


LMKP…LUU

| Major dimensions and tolerance | | | | | Eccentricity | Squareness | Basic load rating | | Weight | Nominal shaft diameter |
|---|---|---|---|---|---|---|---|---|---|---|
| Flange | | | | | | | | | | |
| t mm | Dp mm | X mm | Y mm | Z mm | μm | μm | Dynamic C(N) | Static Co(N) | g | mm |
| 5 | 20 | 3.5 | 6.5 | 3.1 | 15 | 15 | 323 | 530 | 31<br>25 | 6 |
| 5 | 24 | 3.5 | 6.5 | 3.1 | | | 431 | 784 | 51<br>43 | 8 |
| 6 | 29 | 4.5 | 8 | 4.1 | | | 588 | 1,100 | 98<br>78 | 10 |
| 6 | 32 | 4.5 | 8 | 4.1 | | | 813 | 1,570 | 110<br>90 | 12 |
| 6 | 33 | 4.5 | 8 | 4.1 | | | 813 | 1,570 | 130<br>108 | 13 |
| 6 | 38 | 4.5 | 8 | 4.1 | | | 1,230 | 2,350 | 190<br>165 | 16 |
| 8 | 43 | 5.5 | 9.5 | 5.1 | 20 | 20 | 1,400 | 2,740 | 260<br>225 | 20 |
| 8 | 51 | 5.5 | 9.5 | 5.1 | | | 1,560 | 3,140 | 540<br>500 | 25 |
| 10 | 60 | 6.6 | 11 | 6.1 | | | 2,490 | 5,490 | 680<br>590 | 30 |
| 10 | 67 | 6.6 | 11 | 6.1 | 25 | 25 | 2,650 | 6,270 | 1,020<br>930 | 35 |
| 13 | 78 | 9 | 14 | 8.1 | | | 3,430 | 8,040 | 1,570<br>1,380 | 40 |
| 13 | 98 | 9 | 14 | 8.1 | | | 6,080 | 15,900 | 3,600<br>3,400 | 50 |
| 18 | 112 | 11 | 17.5 | 11.1 | 30 | 30 | 7,550 | 20,000 | 4,500<br>4,060 | 60 |

SI Unit 1N ≒ 0.102 kgf

# LMHP-LUU(Resin retainer)

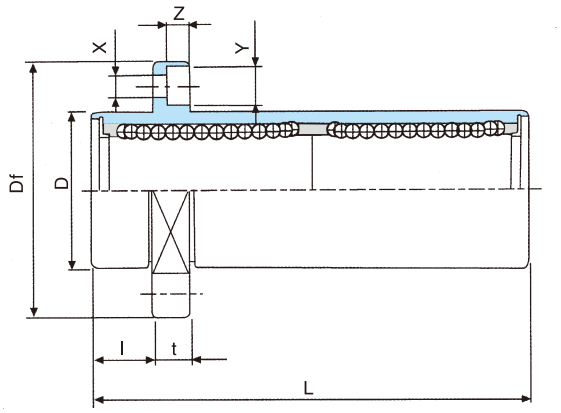


| Nominal shaft diameter mm | Part No. | Major dimensions and tolerance | | | | | | | | | |
|---|---|---|---|---|---|---|---|---|---|---|---|
| | LMHP…LUU | dr | | D | | L | | Flange | | | |
| | | mm | Tolerance μm | mm | Tolerance μm | mm | Tolerance μm | l mm | Df mm | W mm | t mm |
| 6 | **LMHP6LUU** | 6 | 0 -10 | 12 | 0 -13 | 35 | ±300 | 5 | 28 | 18 | 5 |
| 8 | **LMHP8LUU** | 8 | | 15 | | 45 | | 5 | 32 | 21 | 5 |
| 10 | **LMHP10LUU** | 10 | | 19 | 0 -16 | 55 | | 6 | 40 | 25 | 6 |
| 12 | **LMHP12LUU** | 12 | | 21 | | 57 | | 6 | 42 | 27 | 6 |
| 13 | **LMHP13LUU** | 13 | | 23 | | 61 | | 6 | 43 | 29 | 6 |
| 16 | **LMHP16LUU** | 16 | | 28 | | 70 | | 6 | 48 | 34 | 6 |
| 20 | **LMHP20LUU** | 20 | 0 -12 | 32 | 0 -19 | 80 | | 8 | 54 | 38 | 8 |
| 25 | **LMHP25LUU** | 25 | | 40 | | 112 | | 8 | 62 | 46 | 8 |
| 30 | **LMHP30LUU** | 30 | | 45 | | 123 | | 10 | 74 | 51 | 10 |
| 35 | **LMHP35LUU** | 35 | | 52 | | 135 | | 10 | 82 | 60 | 10 |
| 40 | **LMHP40LUU** | 40 | | 60 | | 151 | | 13 | 96 | 70 | 13 |
| 50 | **LMHP50LUU** | 50 | 0 -15 | 80 | 0 -22 | 192 | | 13 | 116 | 86 | 13 |

Note:All sizes of LMH-P type are sealed on both sides.

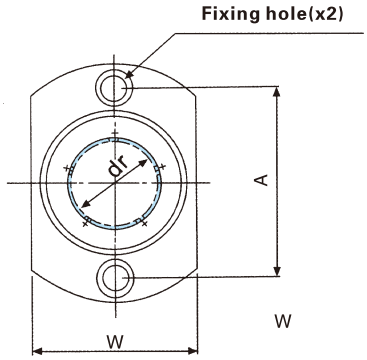


LMHP 13 or less

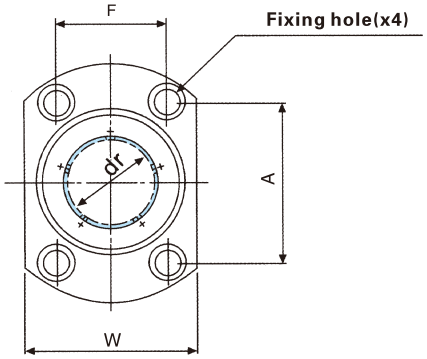


LMHP 16 or more

| Major dimensions and tolerance | | | | | Eccentricity | Squareness | Basic load rating | | Weight | Nominal shaft diameter |
|---|---|---|---|---|---|---|---|---|---|---|
| Flange | | | | | | | | | | |
| A mm | F mm | X mm | Y mm | Z mm | μm | μm | Dynamic C(N) | Static Co(N) | g | mm |
| 20 | - | 3.5 | 6.5 | 3.1 | 15 | 15 | 323 | 530 | 28 | 6 |
| 24 | - | 3.5 | 6.5 | 3.1 | | | 431 | 784 | 47 | 8 |
| 29 | - | 4.5 | 8 | 4.1 | | | 588 | 1,100 | 90 | 10 |
| 32 | - | 4.5 | 8 | 4.1 | | | 813 | 1,570 | 102 | 12 |
| 33 | - | 4.5 | 8 | 4.1 | | | 813 | 1,570 | 123 | 13 |
| 31 | 22 | 4.5 | 8 | 4.1 | | | 1,230 | 2,350 | 182 | 16 |
| 36 | 24 | 5.5 | 9.5 | 5.1 | 20 | 20 | 1,400 | 2,740 | 247 | 20 |
| 40 | 32 | 5.5 | 9.5 | 5.1 | | | 1,560 | 3,140 | 525 | 25 |
| 49 | 35 | 6.6 | 11 | 6.1 | | | 2,490 | 5,490 | 645 | 30 |
| 55 | 35 | 6.6 | 11 | 6.1 | | | 2,650 | 6,270 | 870 | 35 |
| 64 | 45 | 9 | 14 | 8.1 | | | 3,430 | 8,040 | 1380 | 40 |
| 80 | 56 | 9 | 14 | 8.1 | | | 6,080 | 15,900 | 3450 | 50 |

SI Unit 1N ≒ 0.102 kgf

# LMFC(Resin retainer)

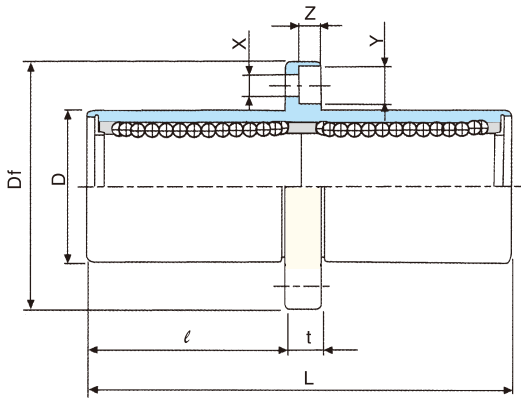


| Nominal shaft diameter mm | Part No. | | Major dimensions and tolerance | | | | | | | | |
|---|---|---|---|---|---|---|---|---|---|---|---|
| | LMFC…UU | LMKC…UU | dr | | D | | L | | Flange | | |
| | | | mm | Tolerance μm | mm | Tolerance μm | mm | Tolerance μm | l mm | Df mm | K mm |
| 6 | **LMFC6UU** | **LMKC6UU** | 6 | 0 -10 | 12 | 0 -13 | 35 | ±300 | 15 | 28 | 22 |
| 8 | **LMFC8UU** | **LMKC8UU** | 8 | | 15 | | 45 | | 20 | 32 | 25 |
| 10 | **LMFC10UU** | **LMKC10UU** | 10 | | 19 | 0 -16 | 55 | | 24.5 | 40 | 30 |
| 12 | **LMFC12UU** | **LMKC12UU** | 12 | | 21 | | 57 | | 25.5 | 42 | 32 |
| 13 | **LMFC13UU** | **LMKC13UU** | 13 | | 23 | | 61 | | 27.5 | 43 | 34 |
| 16 | **LMFC16UU** | **LMKC16UU** | 16 | | 28 | | 70 | | 32 | 48 | 37 |
| 20 | **LMFC20UU** | **LMKC20UU** | 20 | 0 -12 | 32 | 0 -19 | 80 | | 36 | 54 | 42 |
| 25 | **LMFC25UU** | **LMKC25UU** | 25 | | 40 | | 112 | | 52 | 62 | 50 |
| 30 | **LMFC30UU** | **LMKC30UU** | 30 | | 45 | | 123 | | 56.5 | 74 | 58 |
| 35 | **LMFC35UU** | **LMKC35UU** | 35 | 0 -15 | 52 | 0 -22 | 135 | | 62.5 | 82 | 64 |
| 40 | **LMFC40UU** | **LMKC40UU** | 40 | | 60 | | 151 | | 69 | 96 | 75 |
| 50 | **LMFC50UU** | **LMKC50UU** | 50 | | 80 | | 192 | | 89.5 | 116 | 92 |
| 60 | **LMFC60UU** | **LMKC60UU** | 60 | 0 -20 | 90 | 0 -25 | 209 | | 95.5 | 134 | 106 |

Seal type:
LMFC10 UU

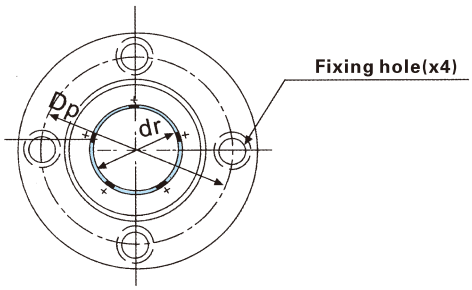


LMFC

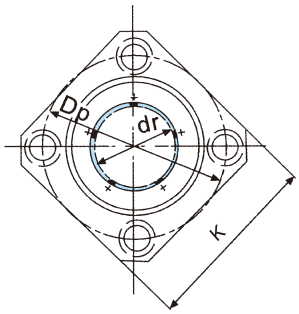


LMKC

| Major dimensions and tolerance | | | | | Eccentricity | Squareness | Basic load rating | | Weight | Nominal shaft diameter |
|---|---|---|---|---|---|---|---|---|---|---|
| Flange | | | | | | | | | | |
| t mm | Dp mm | X mm | Y mm | Z mm | μ m | μ m | Dynamic C(N) | Static Co(N) | g | mm |
| 5 | 20 | 3.5 | 6.5 | 3.1 | 15 | 15 | 323 | 530 | 31<br>25 | 6 |
| 5 | 24 | 3.5 | 6.5 | 3.1 | | | 431 | 784 | 51<br>43 | 8 |
| 6 | 29 | 4.5 | 8 | 4.1 | | | 588 | 1,100 | 98<br>78 | 10 |
| 6 | 32 | 4.5 | 8 | 4.1 | | | 813 | 1,570 | 110<br>90 | 12 |
| 6 | 33 | 4.5 | 8 | 4.1 | | | 813 | 1,570 | 130<br>108 | 13 |
| 6 | 38 | 4.5 | 8 | 4.1 | | | 1,230 | 2,350 | 190<br>165 | 16 |
| 8 | 43 | 5.5 | 9.5 | 5.1 | 20 | 20 | 1,400 | 2,740 | 260<br>225 | 20 |
| 8 | 51 | 5.5 | 9.5 | 5.1 | | | 1,560 | 3,140 | 540<br>500 | 25 |
| 10 | 60 | 6.6 | 11 | 6.1 | | | 2,490 | 5,490 | 680<br>590 | 30 |
| 10 | 67 | 6.6 | 11 | 6.1 | 25 | 25 | 2,650 | 6,270 | 1,020<br>930 | 35 |
| 13 | 78 | 9 | 14 | 8.1 | | | 3,430 | 8,040 | 1,570<br>1,380 | 40 |
| 13 | 98 | 9 | 14 | 8.1 | | | 6,080 | 15,900 | 3,600<br>3,400 | 50 |
| 18 | 112 | 11 | 17.5 | 11.1 | 30 | 30 | 7,550 | 20,000 | 4,500<br>4,060 | 60 |

SI Unit 1N ≒ 0.102 kgf

# LMHC(Resin retainer)

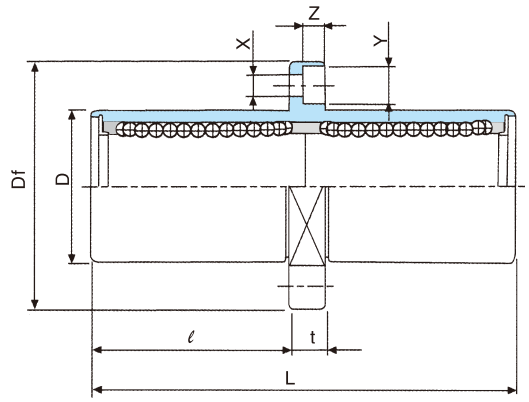


| Nominal shaft diameter mm | Part No. | Major dimensions and tolerance | | | | | | | | | |
|---|---|---|---|---|---|---|---|---|---|---|---|
| | LMHC…UU | dr | | D | | L | | Flange | | | |
| | | mm | Tolerance μm | mm | Tolerance μm | mm | Tolerance μm | ℓ mm | Df mm | W mm | t mm |
| 6 | **LMHC6UU** | 6 | 0 -10 | 12 | 0 -13 | 35 | ±300 | 15 | 28 | 18 | 5 |
| 8 | **LMHC8UU** | 8 | | 15 | | 45 | | 20 | 32 | 21 | 5 |
| 10 | **LMHC10UU** | 10 | | 19 | 0 -16 | 55 | | 24.5 | 40 | 25 | 6 |
| 12 | **LMHC12UU** | 12 | | 21 | | 57 | | 25.5 | 42 | 27 | 6 |
| 13 | **LMHC13UU** | 13 | | 23 | | 61 | | 27.5 | 43 | 29 | 6 |
| 16 | **LMHC16UU** | 16 | | 28 | | 70 | | 32 | 48 | 34 | 6 |
| 20 | **LMHC20UU** | 20 | 0 -12 | 32 | 0 -19 | 80 | | 36 | 54 | 38 | 8 |
| 25 | **LMHC25UU** | 25 | | 40 | | 112 | | 52 | 62 | 46 | 8 |
| 30 | **LMHC30UU** | 30 | | 45 | | 123 | | 56.5 | 74 | 51 | 10 |
| 35 | **LMHC35UU** | 35 | | 52 | | 135 | | 62.5 | 82 | 60 | 10 |
| 40 | **LMHC40UU** | 40 | | 60 | | 151 | | 69 | 96 | 70 | 13 |
| 50 | **LMHC50UU** | 50 | 0 -15 | 80 | 0 -22 | 192 | | 89.5 | 116 | 86 | 18 |

Note:All sizes of LMHC type are sealed on both sides.

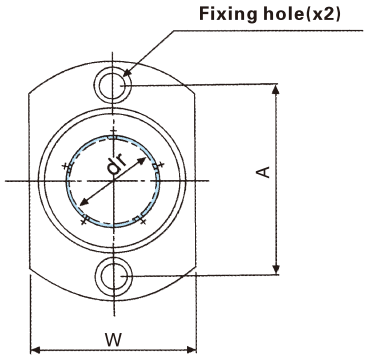


LMHC 13 or less

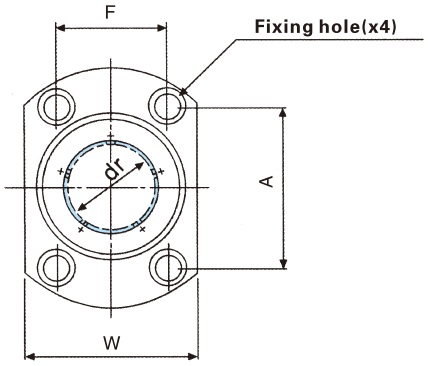


LMHC 16 or more

| Major dimensions and tolerance | | | | | Eccentricity | Squareness | Basic load rating | | Weight | Nominal shaft diameter |
|---|---|---|---|---|---|---|---|---|---|---|
| Flange | | | | | | | | | | |
| A mm | F mm | X mm | Y mm | Z mm | μm | μm | Dynamic C(N) | Static Co(N) | g | mm |
| 20 | - | 3.5 | 6.5 | 3.1 | 15 | 15 | 323 | 529 | 28 | 6 |
| 24 | - | 3.5 | 6.5 | 3.1 | | | 431 | 784 | 47 | 8 |
| 29 | - | 4.5 | 8 | 4.1 | | | 588 | 1,100 | 90 | 10 |
| 32 | - | 4.5 | 8 | 4.1 | | | 813 | 1,570 | 102 | 12 |
| 33 | - | 4.5 | 8 | 4.1 | | | 813 | 1,570 | 123 | 13 |
| 31 | 22 | 4.5 | 8 | 4.1 | | | 1,230 | 2,350 | 182 | 16 |
| 36 | 24 | 5.5 | 9.5 | 5.1 | 20 | 20 | 1,400 | 2,740 | 247 | 20 |
| 40 | 32 | 5.5 | 9.5 | 5.1 | | | 1,560 | 3,140 | 525 | 25 |
| 49 | 35 | 6.6 | 11 | 6.1 | | | 2,490 | 5,490 | 645 | 30 |
| 55 | 35 | 6.6 | 11 | 6.1 | | | 2,650 | 6,270 | 940 | 35 |
| 64 | 45 | 9 | 14 | 8.1 | | | 3,430 | 8,040 | 1,470 | 40 |
| 80 | 56 | 9 | 14 | 8.1 | | | 6,080 | 15,900 | 3,500 | 50 |

SI Unit 1N ≒ 0.102 kgf

# LMEFC(Resin retainer)
# LMEKC(Resin retainer)

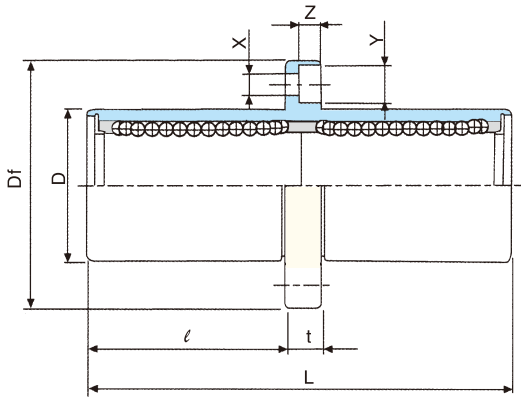


| Nominal shaft diameter mm | Part No. | | Major dimensions and tolerance | | | | | | | | |
|---|---|---|---|---|---|---|---|---|---|---|---|
| | LMEFC…UU | LMEKC…UU | dr | | D | | L | | Flange | | |
| | | | mm | Tolerance μm | mm | Tolerance μm | mm | Tolerance μm | ℓ mm | Df mm | K mm |
| 8 | **LMEFC8UU** | **LMEKC8UU** | 8 | +9 -1 | 16 | 0 -13 | 46 | ±300 | 20.5 | 32 | 25 |
| 12 | **LMEFC12UU** | **LMEKC12UU** | 12 | | 22 | 0 -16 | 61 | | 27.5 | 42 | 32 |
| 16 | **LMEFC16UU** | **LMEKC16UU** | 16 | +11 -1 | 26 | | 68 | | 31 | 46 | 35 |
| 20 | **LMEFC20UU** | **LMEKC20UU** | 20 | | 32 | 0 -19 | 80 | | 36 | 54 | 42 |
| 25 | **LMEFC25UU** | **LMEKC25UU** | 25 | +13 -2 | 40 | | 112 | | 52 | 62 | 50 |
| 30 | **LMEFC30UU** | **LMEKC30UU** | 30 | | 47 | | 123 | | 56.5 | 76 | 60 |
| 40 | **LMEFC40UU** | **LMEKC40UU** | 40 | +16 -4 | 62 | 0 -22 | 151 | | 69 | 98 | 75 |
| 50 | **LMEFC50UU** | **LMEKC50UU** | 50 | | 75 | | 192 | | 89.5 | 112 | 88 |
| 60 | **LMEFC60UU** | **LMEKC60UU** | 60 | | 90 | 0 -25 | 209 | | 95.5 | 134 | 106 |

Seal type:
LMEFC10 UU

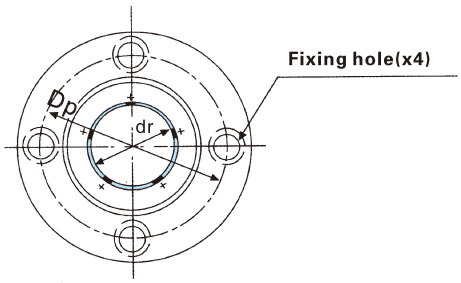


LMEFC

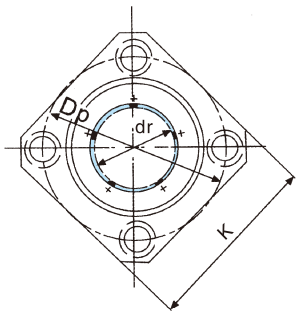


LMEKC

| Major dimensions and tolerance | | | | | Eccentricity | Squareness | Basic load rating | | Weight | Nominal shaft diameter |
|---|---|---|---|---|---|---|---|---|---|---|
| Flange | | | | | | | | | | |
| t mm | Dp mm | X mm | Y mm | Z mm | μm | μm | Dynamic C(N) | Static Co(N) | g | mm |
| 5 | 24 | 3.5 | 6.5 | 3.1 | 15 | 15 | 421 | 804 | 59<br>51 | 8 |
| 6 | 32 | 4.5 | 8 | 4.1 | | | 813 | 1,570 | 110<br>90 | 12 |
| 6 | 36 | 4.5 | 8 | 4.1 | | | 921 | 1,780 | 160<br>135 | 16 |
| 8 | 43 | 5.5 | 9.5 | 5.1 | 17 | 17 | 1,370 | 2,740 | 260<br>225 | 20 |
| 8 | 51 | 5.5 | 9.5 | 5.1 | | | 1,570 | 3,140 | 540<br>500 | 25 |
| 10 | 62 | 6.6 | 11 | 6.1 | | | 2,500 | 5,490 | 815<br>720 | 30 |
| 13 | 80 | 9 | 14 | 8.1 | 20 | 20 | 3,430 | 8,040 | 1,805<br>1,600 | 40 |
| 13 | 94 | 9 | 14 | 8.1 | | | 6,080 | 15,900 | 2,820<br>2,620 | 50 |
| 18 | 112 | 11 | 17.5 | 11.1 | 25 | 25 | 7,550 | 20,000 | 4,920<br>4,480 | 60 |

SI Unit 1N ≒ 0.102 kgf

# LMBFC(Resin retainer)
# LMBKC(Resin retainer)

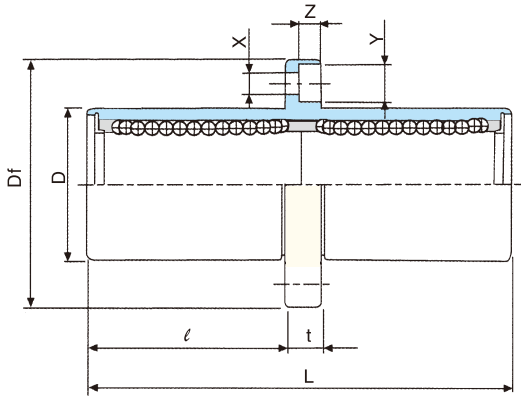


| Nominal shaft diameter mm | Part No. | | Major dimensions and tolerance | | | | | | | | |
|---|---|---|---|---|---|---|---|---|---|---|---|
| | LMBFC…UU | LMBKC…UU | dr | | D | | L | | Flange | | |
| | | | Inch/mm | Tolerance Inch/μm | Inch/mm | Tolerance Inch/μm | Inch/mm | Tolerance Inch/μm | ℓ Inch/mm | Df Inch/mm | K Inch/mm |
| 1 / 4<br>6.350 | LMBFC4UU | LMBKC4UU | .2500<br>6.350 | 0<br>-.00040 | .5000<br>12.700 | 0<br>-.00050<br>0<br>-13 | 1.3750<br>34.925 | ±.012<br>±300 | .5781<br>14.684 | 1.2500<br>31.750 | 1.0000<br>25.400 |
| 3 /8<br>9.525 | LMBFC6UU | LMBKC6UU | .3750<br>9.525 | | .6250<br>15.875 | 0<br>-.00065<br>0<br>-16 | 1.5938<br>40.481 | | .6719<br>17.066 | 1.5000<br>38.100 | 1.2500<br>31.750 |
| 1 /2<br>12.700 | LMBFC8UU | LMBKC8UU | .5000<br>12.700 | 0<br>-10 | .8750<br>22.225 | | 2.3750<br>60.325 | | 1.0625<br>26.988 | 1.7500<br>44.450 | 1.3750<br>34.925 |
| 5 /8<br>15.875 | LMBFC10UU | LMBKC10UU | .6250<br>15.875 | | 1.1250<br>28.575 | | 2.8125<br>71.438 | | 1.2813<br>32.544 | 2.0000<br>50.800 | 1.5000<br>38.100 |
| 3 /4<br>19.050 | LMBFC12UU | LMBKC12UU | .7500<br>19.050 | 0<br>-.00050<br>0<br>-12 | 1.2500<br>31.750 | 0<br>-.00075<br>0<br>-19 | 3.0937<br>78.581 | | 1.3906<br>35.322 | 2.1875<br>55.563 | 1.6875<br>42.863 |
| 1<br>25.400 | LMBFC16UU | LMBKC16UU | 1.0000<br>25.400 | | 1.5625<br>39.688 | | 4.2813<br>108.744 | | 1.9844<br>50.403 | 2.2500<br>63.500 | 2.0000<br>50.800 |
| 1-1 /4<br>31.750 | LMBFC20UU | LMBKC20UU | 1.2500<br>31.750 | 0<br>-.00060<br>0<br>-15 | 2.0000<br>50.800 | 0<br>-.00090<br>0<br>-22 | 5.0000<br>127.000 | | 2.3125<br>58.738 | 3.1250<br>79.375 | 2.5000<br>63.500 |
| 1 - 1 /2<br>38.100 | LMBFC24UU | LMBKC24UU | 1.5000<br>38.100 | | 2.3750<br>60.325 | | 5.6875<br>144.463 | | 2.5938<br>65.882 | 3.7500<br>95.250 | 3.0000<br>76.200 |
| 2<br>50.800 | LMBFC32UU | LMBKC32UU | 2.0000<br>50.800 | | 3.0000<br>76.200 | 0<br>-.00100<br>0<br>-25 | 7.7500<br>196.850 | | 3.6250<br>92.075 | 4.3750<br>111.125 | 3.5000<br>88.900 |

Seal type:
LMBFC10G UU

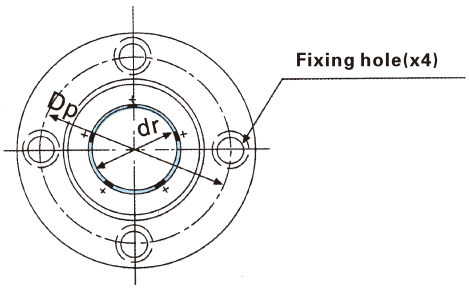


LMBFC

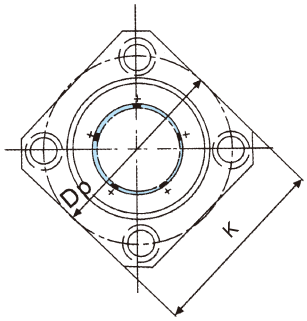


LMBKC

| Major dimensions and tolerance | | | | | Eccentricity | Squareness | Basic load rating | | Weight | Nominal shaft diameter Inch/mm |
|---|---|---|---|---|---|---|---|---|---|---|
| Flange | | | | | | | | | | |
| t Inch/mm | Dp Inch/mm | X Inch/mm | Y Inch/mm | Z Inch/mm | Inch/μm | Inch/μm | Dynamic C(N) | Static Co(N) | g | |
| .2188<br>5.556 | .8750<br>22.225 | .1563<br>3.969 | .2500<br>6.350 | .1406<br>3.572 | .0006<br>15 | .0006<br>15 | 323 | 530 | 40<br>33 | 1 / 4<br>6.350 |
| .2500<br>6.350 | 1.0620<br>26.988 | .1875<br>4.763 | .2969<br>7.541 | .1719<br>4.366 | | | 353 | 630 | 60<br>45 | 3 / 8<br>9.525 |
| .2500<br>6.350 | 1.312<br>33.338 | .1875<br>4.763 | .2969<br>7.541 | .1719<br>4.366 | | | 813 | 1,570 | 126<br>106 | 1 / 2<br>12.700 |
| .2500<br>6.350 | 1.5620<br>39.688 | .1875<br>4.763 | .2969<br>7.541 | .1719<br>4.366 | .0008<br>20 | .0008<br>20 | 1,230 | 2,350 | 215<br>200 | 5 / 8<br>15.875 |
| .3125<br>7.938 | 1.7180<br>43.656 | .2188<br>5.556 | .3438<br>8.731 | .2031<br>5.159 | | | 1,370 | 2,740 | 280<br>240 | 3 /4<br>19.050 |
| 3125<br>7.938 | 2.0310<br>51.594 | .2188<br>5.556 | .3438<br>8.731 | .2031<br>5.159 | | | 1,570 | 3,140 | 515<br>470 | 1<br>25.400 |
| .3750<br>9.525 | 2.5625<br>65.088 | .2813<br>7.144 | .4063<br>10.319 | .2656<br>6.747 | .0010<br>25 | .0010<br>25 | 2,500 | 5,490 | 1,020<br>935 | 1-1 /4<br>31.750 |
| .5000<br>12.700 | 3.0625<br>77.788 | .3437<br>8.731 | .5000<br>12.700 | .3281<br>8.334 | | | 3,430 | 8,040 | 1,630<br>1,460 | 1-1 /2<br>38/100 |
| .5000<br>12.700 | 3.6875<br>93.662 | .3437<br>8.731 | .5000<br>12.700 | .3281<br>8.334 | .0012<br>30 | .0012<br>30 | 6,080 | 15,900 | 2,800<br>2,620 | 2<br>50.800 |

SI Unit 1N ≒ 0.225 lbs
1kg ≒ 2.205 lbs

# SLIDE UNIT SERIES

# SMA-AJ Series

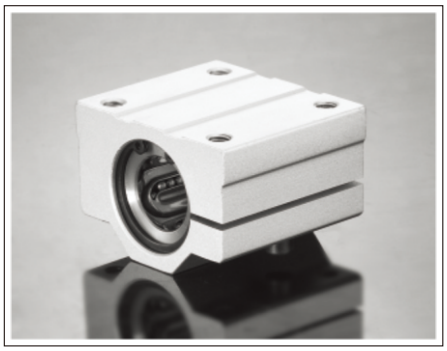

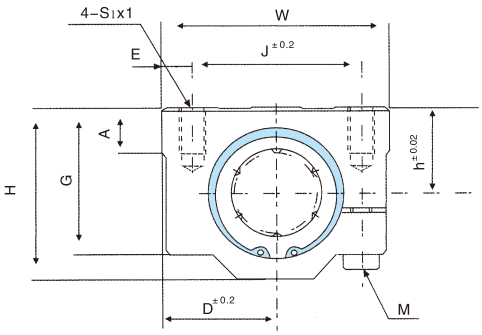


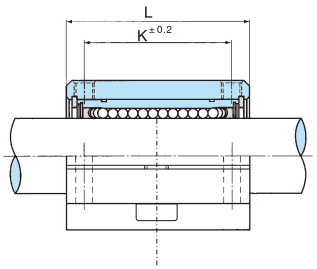


SMA-AJ

| Part Number | Installed L/B | Load Ratings | | Shaft Dia. | Dimensions(mm) | | | | | | | | | | | | Wgt. (G) |
|---|---|---|---|---|---|---|---|---|---|---|---|---|---|---|---|---|---|
| | | C(N) | Co(N) | | h | D | W | H | G | A | J | E | S1×I | K | L | M | |
| **SMA10UUAJ** | LM10UUAJ | 370 | 540 | φ10 | 13 | 20 | 40 | 26 | 21 | 8 | 28 | 6 | M5×12 | 21 | 35 | M4 | 90 |
| **SMA12UUAJ** | LM12UUAJ | 410 | 590 | φ12 | 15 | 21 | 42 | 28 | 24 | 7.4 | 30.5 | 5.75 | M5×12 | 26 | 36 | M4 | 112 |
| **SMA13UUAJ** | LM13UUAJ | 500 | 770 | φ13 | 15 | 22 | 44 | 30 | 24.5 | 8 | 33 | 5.5 | M5×12 | 26 | 39 | M4 | 123 |
| **SMA16UUAJ** | LM16UUAJ | 770 | 1170 | φ16 | 19 | 25 | 50 | 38.5 | 32.5 | 9 | 36 | 7 | M5×12 | 34 | 44 | M4 | 189 |
| **SMA20UUAJ** | LM20UUAJ | 860 | 1370 | φ20 | 21 | 27 | 54 | 41 | 35 | 11 | 40 | 7 | M6×12 | 40 | 50 | M5 | 237 |
| **SMA25UUAJ** | LM25UUAJ | 980 | 1560 | φ25 | 26 | 38 | 76 | 51.5 | 41 | 12 | 54 | 11 | M8×18 | 50 | 67 | M6 | 555 |
| **SMA30UUAJ** | LM30UUAJ | 1560 | 2740 | φ30 | 30 | 39 | 78 | 59.5 | 49 | 15 | 58 | 10 | M8×18 | 58 | 72 | M6 | 685 |
| **SMA35UUAJ** | LM35UUAJ | 1660 | 3130 | φ35 | 34 | 45 | 90 | 68 | 54 | 18 | 70 | 10 | M8×18 | 60 | 80 | M6 | 1100 |
| **SMA40UUAJ** | LM40UUAJ | 2150 | 4010 | φ40 | 40 | 51 | 102 | 78 | 62 | 20 | 80 | 11 | M10×25 | 60 | 90 | M8 | 1600 |
| **SMA50UUAJ** | LM50UUAJ | 3820 | 7930 | φ50 | 52 | 61 | 122 | 102 | 80 | 24 | 100 | 11 | M10×25 | 80 | 110 | M8 | 3350 |
| **SMA60UUAJ** | LM60UUAJ | 4700 | 10000 | φ60 | 58 | 66 | 132 | 114 | 94 | 30 | 108 | 12 | M12×25 | 90 | 122 | M10 | 4270 |

1N ≒ 0.102 kgf

## Type Number Format

**SMA 16 □ UU AJ**

| | |
|---|---|
| SMA | Standard type |
| SMSA | Anticorrosion type |

LM Shaft Diameter

Clearance adjustable type

Seals on both sides

Type
L:Long type
S:Short type

# SMA Series、SMA-L Series、SMA-S Series

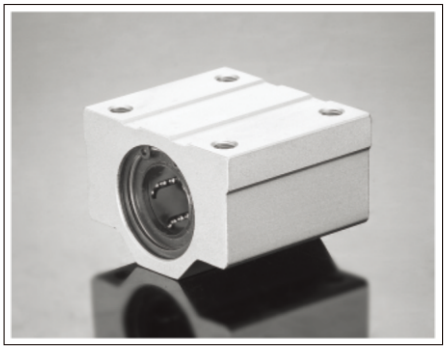

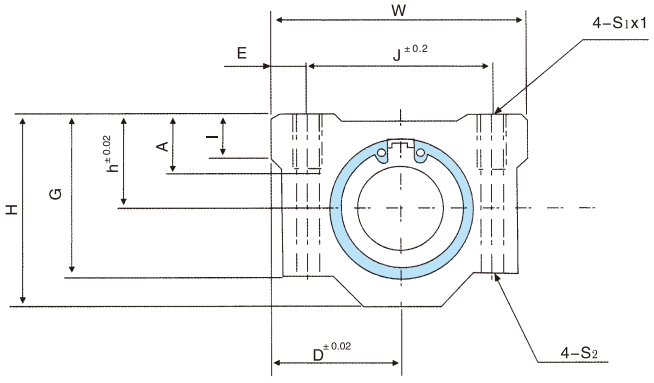


| Standard Type | | | | | Long Type | | | | | Short Type | | | | |
|---|---|---|---|---|---|---|---|---|---|---|---|---|---|---|
| Part Number | Installed L/B | Load Ratings | | Wgt. (G) | Part Number | Installed L/B | Load Ratings | | Wgt. (G) | Part Number | Installed L/B | Load Ratings | | Wgt. (G) |
| | | C(N) | Co(N) | | | | C(N) | Co(N) | | | | C(N) | Co(N) | |
| **SMA8UU** | LM8UU | 260 | 400 | 56 | **SMA8LUU** | 2×LM8UU | 410 | 800 | 94 | **SMA8SUU** | LM8UU | 260 | 400 | 36 |
| **SMA10UU** | LM10UU | 370 | 540 | 90 | **SMA10LUU** | 2×LM10UU | 590 | 1080 | 147 | **SMA10SUU** | LM10UU | 370 | 540 | 63 |
| **SMA12UU** | LM12UU | 410 | 590 | 112 | **SMA12LUU** | 2×LM12UU | 650 | 1180 | 220 | **SMA12SUU** | LM12UU | 410 | 590 | 74 |
| **SMA13UU** | LM13UU | 500 | 770 | 123 | **SMA13LUU** | 2×LM13UU | 800 | 1540 | 245 | **SMA13SUU** | LM13UU | 500 | 770 | 85 |
| **SMA16UU** | LM16UU | 770 | 1170 | 189 | **SMA16LUU** | 2×LM16UU | 1230 | 2340 | 376 | **SMA16SUU** | LM16UU | 770 | 1170 | 132 |
| **SMA20UU** | LM20UU | 860 | 1370 | 237 | **SMA20LUU** | 2×LM20UU | 1370 | 2740 | 476 | **SMA20SUU** | LM20UU | 860 | 1370 | 170 |
| **SMA25UU** | LM25UU | 980 | 1560 | 555 | **SMA25LUU** | 2×LM25UU | 1560 | 3120 | 1115 | **SMA25SUU** | LM25UU | 980 | 1560 | 405 |
| **SMA30UU** | LM30UU | 1560 | 2740 | 685 | **SMA30LUU** | 2×LM30UU | 2490 | 5480 | 1375 | **SMA30SUU** | LM30UU | 1560 | 2740 | 495 |
| **SMA35UU** | LM35UU | 1660 | 3130 | 1100 | **SMA35LUU** | 2×LM35UU | 2650 | 6260 | 2200 | **SMA35SUU** | LM35UU | 1660 | 3130 | 790 |
| **SMA40UU** | LM40UU | 2150 | 4010 | 1600 | **SMA40LUU** | 2×LM40UU | 3440 | 8020 | 3200 | **SMA40SUU** | LM40UU | 2150 | 4010 | 1220 |
| **SMA50UU** | LM50UU | 3820 | 7930 | 3350 | **SMA50LUU** | 2×LM50UU | 6110 | 15860 | 6720 | **SMA50SUU** | LM50UU | 3820 | 7930 | 2300 |
| **SMA60UU** | LM60UU | 4700 | 10000 | 4270 | **SMA60LUU** | 2×LM60UU | 7550 | 20000 | 8560 | **SMA60SUU** | LM60UU | 4700 | 10000 | 3560 |

1N ≒ 0.102 kgf

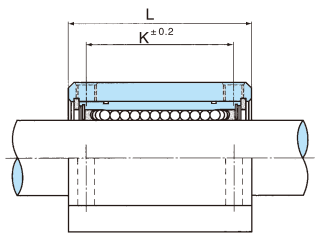


SMA□

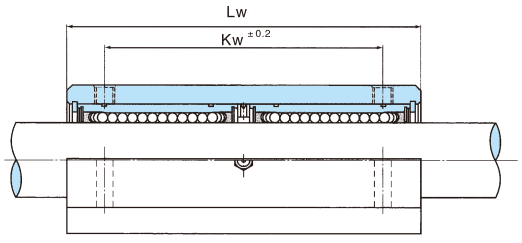


SMA□L

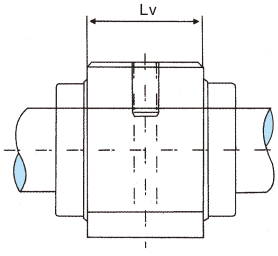


SMA□S

| Dimensions(mm) | | | | | | | | | | | | | | | | Part Number |
|---|---|---|---|---|---|---|---|---|---|---|---|---|---|---|---|---|
| Shaft Dia. | Common | | | | | | | | | | SMA | | SMA□L | | SMA□S | |
| | h | D | W | H | G | A | J | E | S1×I | S2 | K | L | Kw | Lw | Lv | |
| ϕ8 | 11 | 17 | 34 | 22 | 18 | 6 | 24 | 5 | M4×8 | ϕ3.4 | 18 | 30 | 42 | 58 | 15.4 | **SMA8UU** |
| ϕ10 | 13 | 20 | 40 | 26 | 21 | 8 | 28 | 6 | M5×12 | ϕ4.3 | 21 | 35 | 46 | 68 | 19.5 | **SMA10UU** |
| ϕ12 | 15 | 21 | 42 | 28 | 24 | 7.4 | 30.5 | 5.75 | M5×12 | ϕ4.3 | 26 | 36 | 50 | 70 | 20.5 | **SMA12UU** |
| ϕ13 | 15 | 22 | 44 | 30 | 24.5 | 8 | 33 | 5.5 | M5×12 | ϕ4.3 | 26 | 39 | 50 | 75 | 20.5 | **SMA13UU** |
| ϕ16 | 19 | 25 | 50 | 38.5 | 32.5 | 9 | 36 | 7 | M5×12 | ϕ4.3 | 34 | 44 | 60 | 85 | 23.5 | **SMA16UU** |
| ϕ20 | 21 | 27 | 54 | 41 | 35 | 11 | 40 | 7 | M6×12 | ϕ5.2 | 40 | 50 | 70 | 96 | 27.4 | **SMA20UU** |
| ϕ25 | 26 | 38 | 76 | 51.5 | 41 | 12 | 54 | 11 | M8×18 | ϕ6.8 | 50 | 67 | 100 | 130 | 37.4 | **SMA25UU** |
| ϕ30 | 30 | 39 | 78 | 59.5 | 49 | 15 | 58 | 10 | M8×18 | ϕ6.8 | 58 | 72 | 110 | 140 | 40.9 | **SMA30UU** |
| ϕ35 | 34 | 45 | 90 | 68 | 54 | 18 | 70 | 10 | M8×18 | ϕ6.8 | 60 | 80 | 120 | 155 | 45.4 | **SMA35UU** |
| ϕ40 | 40 | 51 | 102 | 78 | 62 | 20 | 80 | 11 | M10×25 | ϕ8.6 | 60 | 90 | 140 | 175 | 56.4 | **SMA40UU** |
| ϕ50 | 52 | 61 | 122 | 102 | 80 | 24 | 100 | 11 | M10×25 | ϕ8.6 | 80 | 110 | 160 | 215 | 68.9 | **SMA50UU** |
| ϕ60 | 58 | 66 | 132 | 114 | 94 | 30 | 108 | 12 | M12×25 | ϕ10.7 | 90 | 122 | 180 | 240 | 78.8 | **SMA60UU** |

# KBA Series、KBA-L Series、KBA-S Series

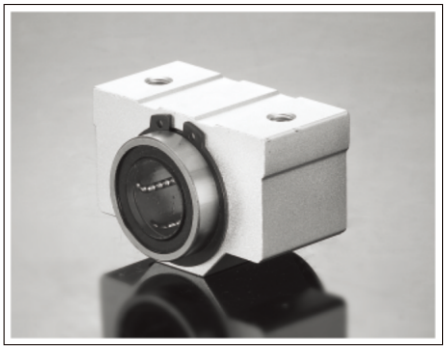

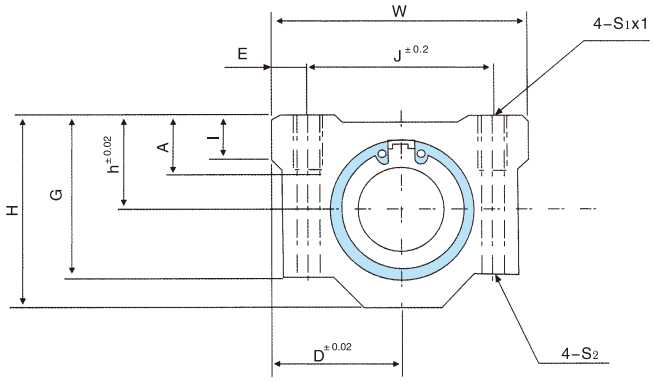


| Standard Type | | | | | Long Type | | | | | Short Type | | | | |
|---|---|---|---|---|---|---|---|---|---|---|---|---|---|---|
| Part Number | Installed L/B | Load Ratings | | Wgt. (G) | Part Number | Installed L/B | Load Ratings | | Wgt. (G) | Part Number | Installed L/B | Load Ratings | | Wgt. (G) |
| | | C(N) | Co(N) | | | | C(N) | Co(N) | | | | C(N) | Co(N) | |
| **KBA8UU** | LME8UU | 260 | 400 | 60 | **KBA8LUU** | 2×LME8UU | 410 | 800 | 98 | **KBA8SUU** | LME8UU | 260 | 400 | 40 |
| **KBA12UU** | LME12UU | 410 | 590 | 118 | **KBA12LUU** | 2×LME12UU | 650 | 1180 | 232 | **KBA12SUU** | LME12UU | 410 | 590 | 82 |
| **KBA16UU** | LME16UU | 770 | 1170 | 180 | **KBA16LUU** | 2×LME16UU | 1230 | 2340 | 360 | **KBA16SUU** | LME16UU | 770 | 1170 | 122 |
| **KBA20UU** | LME20UU | 860 | 1370 | 245 | **KBA20LUU** | 2×LME20UU | 1370 | 2740 | 490 | **KBA20SUU** | LME20UU | 860 | 1370 | 176 |
| **KBA25UU** | LME25UU | 980 | 1560 | 550 | **KBA25LUU** | 2×LME25UU | 1560 | 3120 | 1100 | **KBA25SUU** | LME25UU | 980 | 1560 | 400 |
| **KBA30UU** | LME30UU | 1560 | 2740 | 760 | **KBA30LUU** | 2×LME30UU | 2490 | 5480 | 1525 | **KBA30SUU** | LME30UU | 1560 | 2740 | 570 |
| **KBA40UU** | LME40UU | 2150 | 4010 | 1700 | **KBA40LUU** | 2×LME40UU | 3440 | 8020 | 3400 | **KBA40SUU** | LME40UU | 2150 | 4010 | 1320 |
| **KBA50UU** | LME50UU | 3820 | 7930 | 2950 | **KBA50LUU** | 2×LME50UU | 6110 | 15860 | 5920 | **KBA50SUU** | LME50UU | 3820 | 7930 | 1900 |

1N ≒ 0.102 kgf

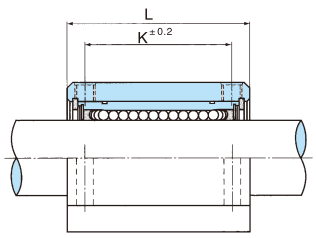


KBA

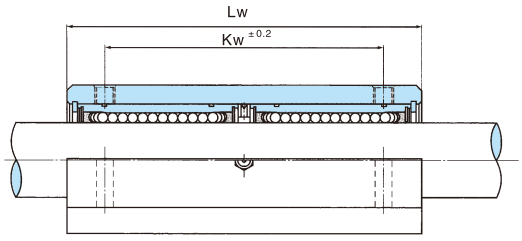


KBA□L

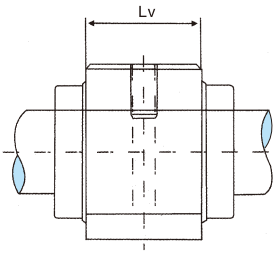


KBA□S

| Dimensions(mm) | | | | | | | | | | | | | | | | Part Number |
|---|---|---|---|---|---|---|---|---|---|---|---|---|---|---|---|---|
| Shaft Dia. | Common | | | | | | | | | | SC | | SC□W | | SC□V | |
| | h | D | W | H | G | A | J | E | S1×I | S2 | K | L | Kw | Lw | Lv | |
| ϕ8 | 11 | 17 | 34 | 22 | 18 | 6 | 24 | 5 | M4×8 | ϕ3.4 | 18 | 30 | 42 | 58 | 14.4 | **KBA8UU** |
| ϕ12 | 15 | 22 | 44 | 30 | 24.5 | 8 | 33 | 5.5 | M5×10 | ϕ4.3 | 26 | 39 | 64 | 77 | 20.3 | **KBA12UU** |
| ϕ16 | 19 | 25 | 50 | 38.5 | 32.5 | 9 | 36 | 7 | M5×12 | ϕ4.3 | 34 | 44 | 79 | 89 | 22.3 | **KBA16UU** |
| ϕ20 | 21 | 27 | 54 | 41 | 35 | 11 | 40 | 7 | M6×12 | ϕ5.2 | 40 | 53 | 90 | 106 | 28.3 | **KBA20UU** |
| ϕ25 | 26 | 38 | 76 | 51.5 | 41 | 12 | 54 | 11 | M8×18 | ϕ6.8 | 50 | 67 | 119 | 136 | 40.4 | **KBA25UU** |
| ϕ30 | 30 | 39 | 78 | 59.5 | 49 | 15 | 58 | 10 | M8×18 | ϕ6.8 | 58 | 76 | 132 | 154 | 48.4 | **KBA30UU** |
| ϕ40 | 40 | 51 | 102 | 78 | 62 | 20 | 80 | 11 | M10×25 | ϕ8.6 | 60 | 90 | 150 | 180 | 56.4 | **KBA40UU** |
| ϕ50 | 52 | 61 | 122 | 102 | 80 | 24 | 100 | 11 | M10×25 | ϕ8.6 | 80 | 110 | 200 | 230 | 72.3 | **KBA50UU** |

# SME

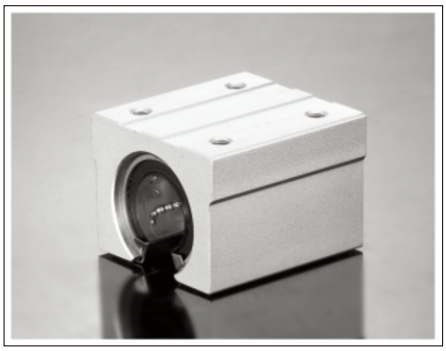

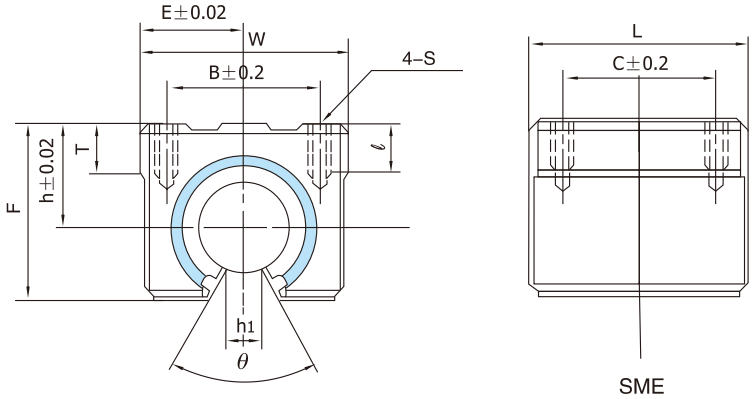


Unit: mm

| Nominal shaft diameter (mm) | Part No. | Major dimensions | | | | | | | | Mounting dimensions | | | | Slide bush | | | Weight |
|---|---|---|---|---|---|---|---|---|---|---|---|---|---|---|---|---|---|
| | | | | | | | | | | | | | | Part No. | Basic load rating | | |
| | | h | E | W | L | F | T | $h_1$ | θ | B | C | S | ℓ | | dynamic (C N) | static (Co N) | (g) |
| **10** | **SME 10UU** | 15 | 18 | 36 | 32 | 24 | 7 | 6 | 80° | 25 | 20 | M5 | 10 | **LM 10UU-OP** | 372 | 549 | 65 |
| **13** | **SME 13UU** | 17 | 20 | 40 | 39 | 27.6 | 8 | 8.5 | 80° | 28 | 26 | M5 | 10 | **LM 13UU-OP** | 510 | 784 | 100 |
| **16** | **SME 16UU** | 20 | 22.5 | 45 | 45 | 33 | 9 | 10 | 80° | 32 | 30 | M5 | 12 | **LM 16UU-OP** | 774 | 1,180 | 150 |
| **20** | **SME 20UU** | 23 | 24 | 48 | 50 | 39 | 11 | 10 | 60° | 35 | 35 | M6 | 12 | **LM 20UU-OP** | 882 | 1,370 | 200 |
| **25** | **SME 25UU** | 27 | 30 | 60 | 65 | 47 | 14 | 11.5 | 50° | 40 | 40 | M6 | 12 | **LM 25UU-OP** | 980 | 1,570 | 450 |
| **30** | **SME 30UU** | 33 | 35 | 70 | 70 | 56 | 15 | 14 | 50° | 50 | 50 | M8 | 18 | **LM 30UU-OP** | 1,570 | 2,740 | 630 |
| **35** | **SME 35UU** | 37 | 40 | 80 | 80 | 63 | 18 | 16 | 50° | 55 | 55 | M8 | 18 | **LM 35UU-OP** | 1,670 | 3,140 | 925 |
| **40** | **SME 40UU** | 42 | 45 | 90 | 90 | 72 | 20 | 19 | 50° | 65 | 65 | M10 | 20 | **LM 40UU-OP** | 2,160 | 4,020 | 1,330 |
| **50** | **SME 50UU** | 53 | 60 | 120 | 110 | 92 | 25 | 23 | 50° | 94 | 80 | M10 | 20 | **LM 50UU-OP** | 3,820 | 7,940 | 3,000 |

SI Unit 1N ≒ 0.102 kgf

**Type Number Format**

**SME 16 UU**

| | |
|---|---|
| SME | Standard type |
| SMSE | Anticorrosion type |

Seals on both sides

# SME-L

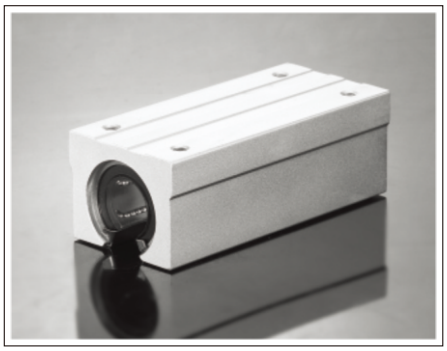

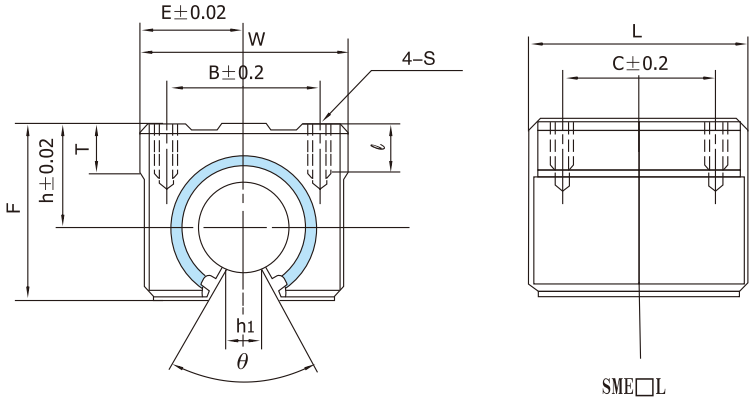


| Part No. | Main dimension (mm) | | | | | | | | | | | Slide bush | Basic load rating (C Co) | Weight (g) |
|---|---|---|---|---|---|---|---|---|---|---|---|---|---|---|
| | h | E | W | L | F | T | $h_1$ | θ | B | C | S×l | | | |
| **SME 16LUU** | 20 | 23 | 45 | 85 | 33 | 9 | 10 | 80° | 32 | 60 | M5×12 | **LM 16UU-OP×2** | 1548 2360 | 300 |
| **SME 20LUU** | 23 | 24 | 48 | 96 | 39 | 11 | 10 | 60° | 35 | 70 | M6×12 | **LM 20UU-OP×2** | 1760 2740 | 400 |
| **SME 25LUU** | 27 | 30 | 60 | 130 | 47 | 14 | 11.5 | 50° | 40 | 100 | M6×12 | **LM 25UU-OP×2** | 1960 3140 | 900 |
| **SME 30LUU** | 33 | 35 | 70 | 140 | 56 | 15 | 14 | 50° | 50 | 110 | M8×18 | **LM 30UU-OP×2** | 3140 5480 | 1260 |
| **SME 35LUU** | 37 | 40 | 80 | 155 | 63 | 18 | 16 | 50° | 55 | 120 | M8×18 | **LM 35UU-OP×2** | 3340 6280 | 1850 |
| **SME 40LUU** | 42 | 45 | 90 | 175 | 72 | 20 | 19 | 50° | 65 | 140 | M10×20 | **LM 40UU-OP×2** | 4320 8040 | 2660 |

# KBE

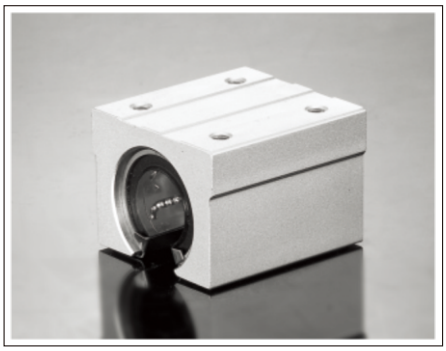

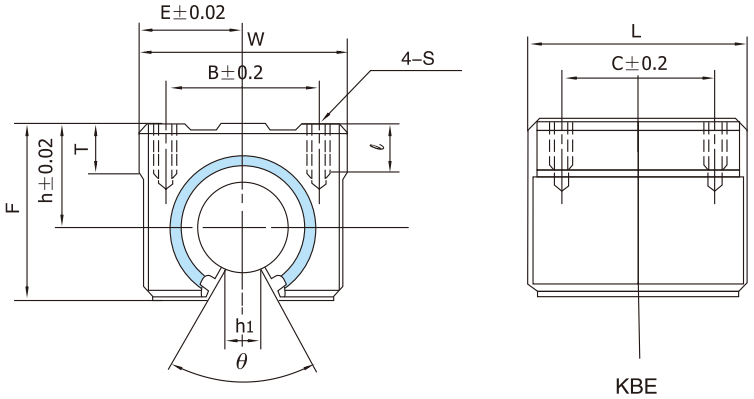


| Part No. | | Main dimension (mm) | | | | | | | | | | | | Squareness | Eccentricity | Weight |
|---|---|---|---|---|---|---|---|---|---|---|---|---|---|---|---|---|
| Seal Type | Ball Circuit | h | E | W | L | F | T | $h_1$ | θ | B | C | S | I | | | (g) |
| **KBE 10** | 10 | 15 | 18 | 36 | 32 | 24 | 7 | 6 | 80° | 25 | 20 | M5 | 10 | 38 | 56 | **650** |
| **KBE 12** | 12 | 17 | 20 | 40 | 39 | 27.6 | 8 | 8.5 | 80° | 28 | 26 | M5 | 10 | 42 | 61 | **100** |
| **KBE 13** | 13 | 17 | 20 | 40 | 39 | 27.6 | 8 | 8.5 | 80° | 28 | 26 | M5 | 10 | 52 | 80 | **100** |
| **KBE 16** | 16 | 20 | 22.5 | 45 | 45 | 33 | 9 | 10 | 60° | 32 | 30 | M5 | 12 | 59 | 91 | **150** |
| **KBE 20** | 20 | 23 | 24 | 48 | 50 | 39 | 11 | 10 | 60° | 35 | 35 | M6 | 12 | 88 | 140 | **200** |
| **KBE 25** | 25 | 27 | 30 | 60 | 65 | 47 | 14 | 11.5 | 60° | 40 | 40 | M6 | 12 | 100 | 160 | **450** |
| **KBE 30** | 30 | 33 | 35 | 70 | 70 | 56 | 15 | 14 | 60° | 50 | 50 | M8 | 18 | 160 | 280 | **630** |
| **KBE 40** | 40 | 42 | 45 | 90 | 90 | 72 | 20 | 19 | 60° | 65 | 65 | M10 | 20 | 220 | 410 | **1330** |
| **KBE 50** | 50 | 53 | 60 | 120 | 110 | 92 | 25 | 23 | 60° | 94 | 80 | M10 | 20 | 390 | 810 | **3000** |

# SH

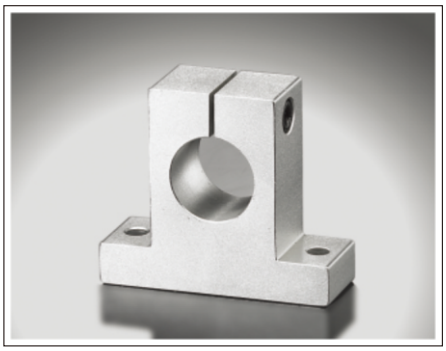

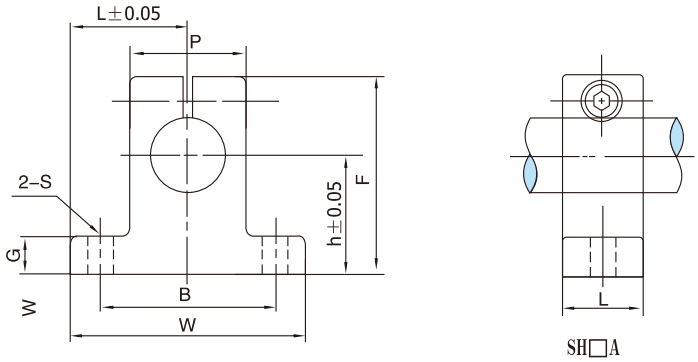


Unit: mm

| Nominal shaft diameter (mm) | Part No. | Main dimension (mm) | | | | | | | | | Clamping bolt designation | Mounting bolt designation | Weight (g) |
|---|---|---|---|---|---|---|---|---|---|---|---|---|---|
| | | h | E | W | L | F | G | P | B | S | | | |
| 8 | **SH 8A** | 20 | 21 | 42 | 14 | 32.8 | 6 | 18 | 32 | 5.5 | M4 | M5 | 24 |
| 10 | **SH 10A** | 20 | 21 | 42 | 14 | 32.8 | 6 | 18 | 32 | 5.5 | M4 | M5 | 24 |
| 12 | **SH 12A** | 23 | 21 | 42 | 14 | 37.5 | 6 | 20 | 32 | 5.5 | M4 | M5 | 30 |
| 13 | **SH 13A** | 23 | 21 | 42 | 14 | 37.5 | 6 | 20 | 32 | 5.5 | M4 | M5 | 30 |
| 16 | **SH 16A** | 27 | 24 | 48 | 16 | 44 | 8 | 25 | 38 | 5.5 | M4 | M5 | 40 |
| 20 | **SH 20A** | 31 | 30 | 60 | 20 | 51 | 10 | 30 | 45 | 6.6 | M5 | M6 | 70 |
| 25 | **SH 25A** | 35 | 35 | 70 | 24 | 60 | 12 | 38 | 56 | 6.6 | M6 | M6 | 130 |
| 30 | **SH 30A** | 42 | 42 | 84 | 28 | 70 | 12 | 44 | 64 | 9 | M6 | M8 | 180 |
| 35 | **SH 35A** | 50 | 49 | 98 | 32 | 82 | 15 | 50 | 74 | 11 | M8 | M10 | 270 |
| 40 | **SH 40A** | 60 | 57 | 114 | 36 | 96 | 15 | 60 | 90 | 11 | M8 | M10 | 420 |
| 50 | **SH 50A** | 70 | 63 | 126 | 40 | 120 | 18 | 74 | 100 | 14 | M12 | M12 | 750 |
| 60 | **SH 60A** | 80 | 74 | 148 | 45 | 136 | 18 | 90 | 120 | 14 | M12 | M12 | 1,100 |

### Type Number Format

SH 20 A

**・Type**

| | |
|---|---|
| SH-A | Aluminum shaft supporter |
| SH | Cast-iron shaft supporter |

Nominal shaft diameter

**・Material grade**

| Symbol | Specification |
|---|---|
| No entry | Cast iron |
| A | Aluminum |

# SHF Type

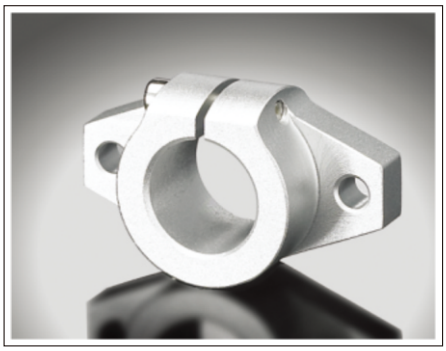

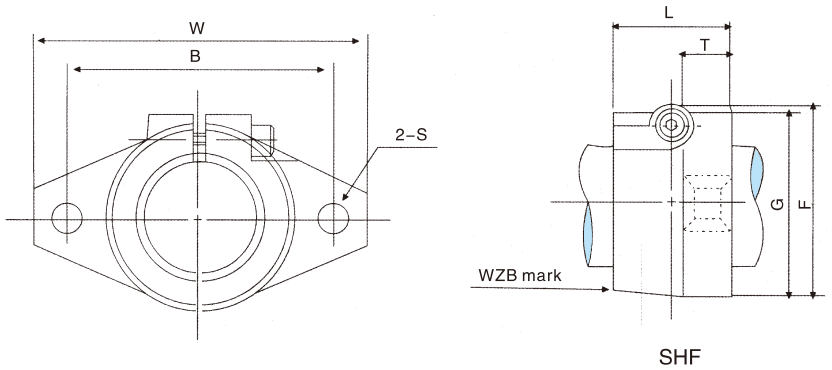


| Part number | Shaft Diameter mm | Major Dimensions | | | | | | | Adjusting Bolt Size | Wgt. g |
|---|---|---|---|---|---|---|---|---|---|---|
| | | W mm | L mm | T mm | F mm | G mm | B mm | S (Bolt Size) mm | | |
| **SHF10** | 10 | 43 | 10 | 5 | 24 | 20 | 32 | 5.5(M5) | M4 | 13 |
| **SHF12** | 12 | 47 | 13 | 7 | 28 | 25 | 36 | 5.5(M5) | M4 | 20 |
| **SHF13** | 13 | 47 | 13 | 7 | 28 | 25 | 36 | 5.5(M5) | M4 | 20 |
| **SHF16** | 16 | 50 | 16 | 8 | 31 | 28 | 40 | 5.5(M5) | M4 | 27 |
| **SHF20** | 20 | 60 | 20 | 8 | 37 | 34 | 48 | 7(M6) | M5 | 40 |
| **SHF25** | 25 | 70 | 25 | 10 | 42 | 40 | 56 | 7(M6) | M5 | 60 |
| **SHF30** | 30 | 80 | 30 | 12 | 50 | 46 | 64 | 9(M8) | M6 | 110 |
| **SHF35** | 35 | 92 | 35 | 14 | 58 | 50 | 72 | 12(M10) | M8 | 380 |
| **SHF40** | 40 | 102 | 40 | 16 | 67 | 56 | 80 | 12(M10) | M10 | 510 |
| **SHF50** | 50 | 122 | 50 | 19 | 83 | 70 | 96 | 14(M12) | M12 | 890 |
| **SHF60** | 60 | 140 | 60 | 23 | 95 | 82 | 112 | 14(M12) | M12 | 1,500 |

**Part Number structure example**

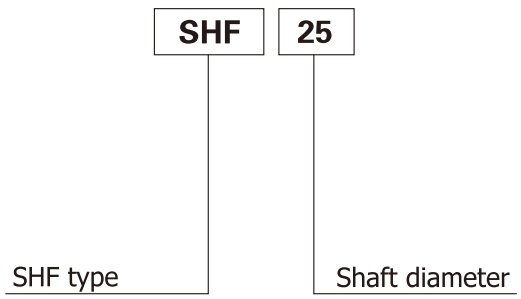

# SBR Series

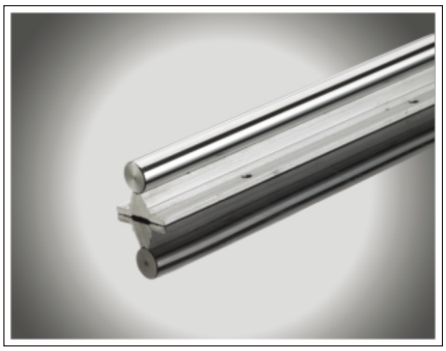

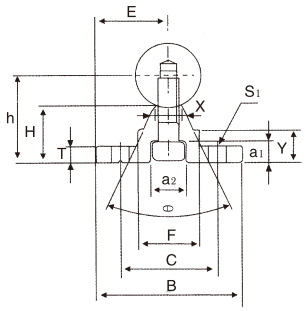


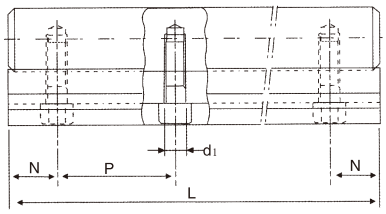


| Part Number | Shaft Dia. | Dimensions(mm) | | | | | | | | | | | | | | Wgt. (Kg)/m |
|---|---|---|---|---|---|---|---|---|---|---|---|---|---|---|---|---|
| | | E | h | B | H | T | F | X | Y | C | θ | S1 | a1 | a2 | d1 | |
| **SBR16** | ϕ16 | 20 | 25 | 40 | 17.8 | 5 | 18.5 | 8 | 11.7 | 30 | 80° | ϕ5.5 | 6 | 9.5 | 5.5 | 2.56 |
| **SBR20** | ϕ20 | 22.5 | 27 | 45 | 17.7 | 5 | 19 | 8 | 10 | 30 | 50° | ϕ5.5 | 6.5 | 11 | 6.6 | 3.50 |
| **SBR25** | ϕ25 | 27.5 | 33 | 55 | 21 | 6 | 21.5 | 8 | 12 | 35 | 50° | ϕ6.6 | 6.5 | 11 | 6.6 | 5.30 |
| **SBR35** | ϕ30 | 30 | 37 | 60 | 22.8 | 7 | 26.5 | 10.3 | 13 | 40 | 50° | ϕ6.6 | 8.5 | 14 | 9 | 7.38 |
| **SBR35** | ϕ35 | 32.5 | 43 | 65 | 26.6 | 8 | 28 | 13 | 15.5 | 45 | 50° | ϕ9 | 8.5 | 14 | 9 | 9.68 |
| **SBR40** | ϕ40 | 37.5 | 48 | 75 | 29.4 | 9 | 38 | 16 | 17 | 55 | 50° | ϕ9 | 8.5 | 14 | 9 | 12.69 |
| **SBR50** | ϕ50 | 47.5 | 62 | 95 | 38.8 | 11 | 45 | 20 | 21 | 70 | 50° | ϕ11 | 12.5 | 19 | 11 | 20.46 |

## Standard Length of Support Rail and Dimensions

| Part Number | SBR16 | SBR20 | SBR25 | SBR30 | SBR35 | SBR40 | SBR50 |
|---|---|---|---|---|---|---|---|
| Standard Length (L) | 190<br>340<br>640<br>940 | 340<br>640<br>940<br>1240 | 250<br>450<br>850<br>1250 | 450<br>850<br>1250<br>1450 | 460<br>660<br>860<br>1060 | 460<br>660<br>860<br>1060<br>1260 | 470<br>670<br>870<br>1070<br>1270 |
| N | 20 | 20 | 25 | 25 | 30 | 30 | 35 |
| Pitch(P) | 150 | 150 | 200 | 200 | 200 | 200 | 200 |
| Max.Length | 1390 | 1390 | 1850 | 1850 | 1860 | 1860 | 2070 |

### Part Number Notation

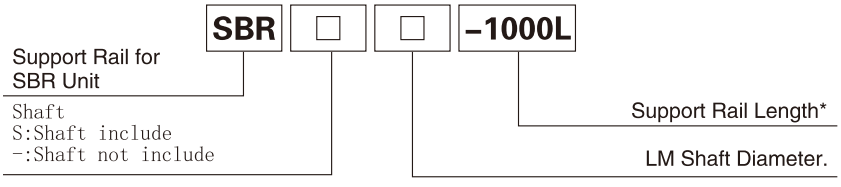

# TBS Series

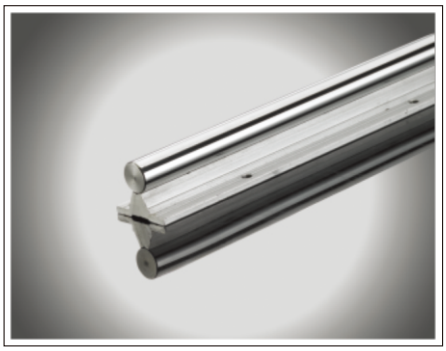

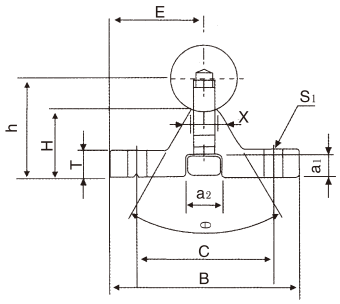


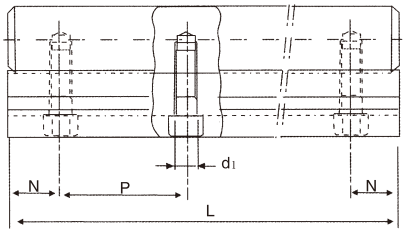


| Part Number | Shaft Dia. | Dimensions(mm) | | | | | | | | | | | | Wgt. (Kg)/m |
|---|---|---|---|---|---|---|---|---|---|---|---|---|---|---|
| | | E | h | B | H | T | X | C | θ | S1 | a1 | a2 | d1 | |
| **TBS16** | ϕ16 | 25 | 22 | 50 | 14.84 | 6 | 8 | 37 | 60° | ϕ5.5 | 6 | 9.5 | 5.5 | 2.66 |
| **TBS20** | ϕ20 | 27.5 | 29 | 55 | 19.64 | 8 | 8 | 40 | 50° | ϕ5.5 | 6.5 | 11 | 6.6 | 4.23 |
| **TBS25** | ϕ25 | 32.5 | 32 | 65 | 20 | 10 | 8 | 45 | 50° | ϕ6.6 | 6.5 | 11 | 6.6 | 5.85 |
| **TBS30** | ϕ30 | 37.5 | 36.5 | 75 | 22.28 | 12 | 10.3 | 55 | 50° | ϕ6.6 | 8.5 | 14 | 9 | 8.28 |

## Standard Length of Support Rail and Dimensions

| Part Number | TBS16 | TBS20 | TBS25 | TBS30 |
|---|---|---|---|---|
| Standard Length (L) | 190<br>340<br>640<br>940 | 340<br>640<br>940<br>1240 | 250<br>450<br>850<br>1250 | 450<br>850<br>1250<br>1450 |
| N | 20 | 20 | 25 | 25 |
| Pitch(P) | 150 | 150 | 200 | 200 |
| Max.Length | 1390 | 1390 | 1850 | 1850 |

### Part Number Notation

**TB** □ □ **–1000L**

- TB: Support Rail for TBR Unit
- □: Shaft
  S:Shaft include
  -:Shaft not include
- □: LM Shaft Diameter.
- –1000L: Support Rail Length*

# TBR□S Series

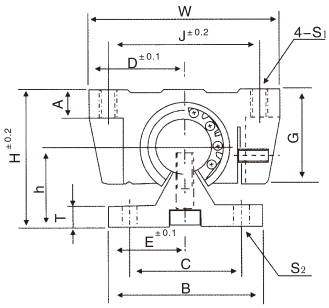


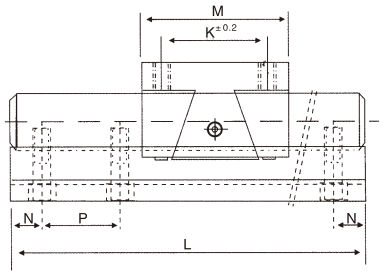


| Part Number | | Shaft Dia. | Basic Load Ratings | | Weight | | Dimensions(mm) | | | |
|---|---|---|---|---|---|---|---|---|---|---|
| Unit | Case** | | Dynamic C(N) | Static Co(kg) | Case(kg) | Rail(kg/m) | D | h | H | E |
| **TBR16S** | **TBR16UU** | ϕ16 | 392 | 490 | 0.18 | 2.45 | 31 | 22.14 | 40 | 25 |
| **TBR20S** | **TBR20UU** | ϕ20 | 784 | 1176 | 0.30 | 3.60 | 34 | 29.01 | 50 | 27.5 |
| **TBR25S** | **TBR25UU** | ϕ25 | 1568 | 2352 | 0.60 | 5.60 | 41 | 31.97 | 60 | 32.5 |
| **TBR30S** | **TBR30UU** | ϕ30 | 1764 | 2940 | 0.90 | 8.00 | 45.5 | 36.52 | 70 | 37.5 |

| Part Number | Dimensions(mm) | | | | | | | | | | | | |
|---|---|---|---|---|---|---|---|---|---|---|---|---|---|
| | W | G | A | B | T | M | S1 | J | K | S2 | C | N* | P* |
| **TBR16S** | 62 | 26 | 8 | 50 | 6 | 42 | M5 | 50 | 30 | ϕ5.5 | 37 | 20 | 150 |
| **TBR20S** | 68 | 31 | 10 | 55 | 8 | 51 | M6 | 54 | 37 | ϕ5.5 | 40 | 20 | 150 |
| **TBR25S** | 82 | 41 | 12 | 65 | 10 | 65 | M8 | 65 | 50 | ϕ6.6 | 45 | 25 | 200 |
| **TBR30S** | 91 | 48 | 12 | 75 | 12 | 75 | M8 | 75 | 60 | ϕ6.6 | 55 | 25 | 200 |

1N ≒ 0.102 kgf

## Part Number Notation

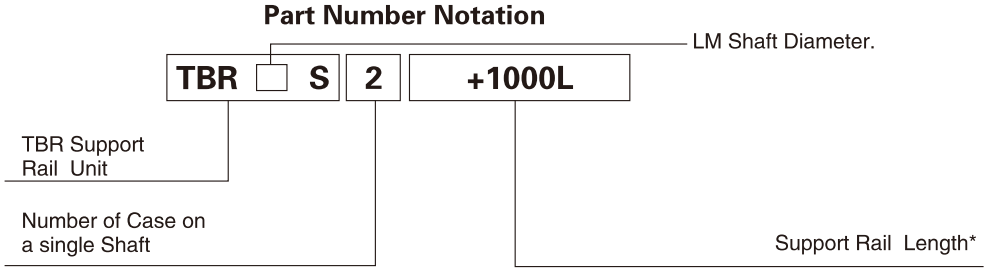

# Fine Shaft

CLCi may accept requests for other major diameter tolerances.
Material: High-carbon chromium bearing steel (SUJ2)
Hardness: HV 697 (HRC 60) or more
Surface roughness: 1.5 μ mR max.

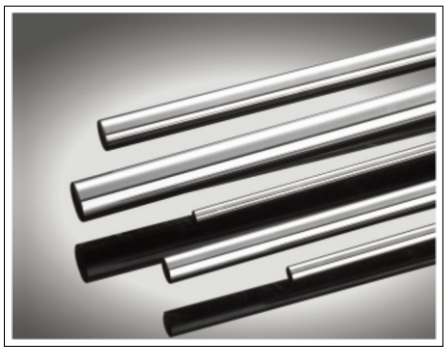

# Part number structure example

**SF** **30** X **650**

- SF → Material
- 30 → Outer diameter(D)
- 650 → Total length(L)

## Material

| | | |
|---|---|---|
| **SF** | SUJ2 | (solid) |
| **SFH** | SUJ2 | (hollow) |
| **SFC** | SUJ2 | (solid chrome plating) |
| **SFHC** | SUJ2 | (hollow chrome plating) |
| **SSF** | SUS440 | (solid) |
| **SSFH** | SUS440 | (hollow) |
| **SFS** | S45 | (solid) |
| **SFSC** | S45 | (solid chrome plating) |

## Fine Shaft(SF Type)

| Part Number | Outer Diameter D mm | Tolerance g6 μ m | Length L mm 100 | 200 | 300 | 400 | 500 | 600 | 800 | 1000 | 1200 | 1500 | 1800 | 2000 | Mass kg/m |
|---|---|---|---|---|---|---|---|---|---|---|---|---|---|---|---|
| **SF6** | 6 | -4/-12 | 100 | | | | | 600 | | | | | | | 0.23 |
| **SF8** | 8 | -5 | | | | | | | 800 | | | | | | 0.40 |
| **SF10** | 10 | -14 | | 200 | | | | | | 1000 | | | | | 0.62 |
| **SF12** | 12 | -6 -17 | | | | | | | | | | 1500 | | | 0.89 |
| **SF13** | 13 | | | | | | | | | | | | | | 1.04 |
| **SF16** | 16 | | | | 300 | | | | | | | | | 2000 | 1.58 |
| **SF20** | 20 | -7 -20 | | | | | | | | | | | | | 2.47 |
| **SF25** | 25 | | | | | 400 | | | | | | | | | 3.85 |
| **SF30** | 30 | | | | | | | | | | | | | | 5.55 |
| **SF35** | 35 | -9 -25 | | | | | 500 | | | | | | | | 7.55 |
| **SF40** | 40 | | | | | | | | | | | | | | 9.87 |
| **SF50** | 50 | | | | | | | 600 | | | | | | | 15.4 |
| **SF60** | 60 | | | | | | | | | | | | | | 22.21 |

Material: high-carbon chromium bearing steel(SUJ2) hardness: HV697(60HRC) or more

# SF/SFH

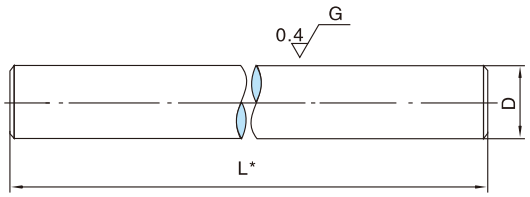


# SFH/SFHC

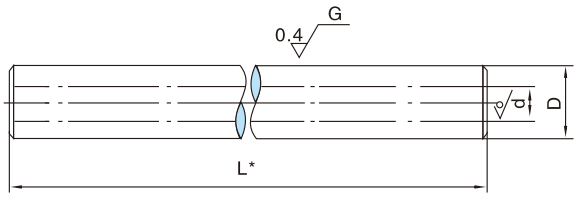


*JISB0405 coarse-grade applies to length(L).

## Pipe Fine Shaft (SFH Type)

| Part Number | Outer Diameter D mm | Tolerance g6 μm | Lnner diameter d mm | Length L mm 100 | 200 | 300 | 400 | 500 | 600 | 800 | 1000 | 1200 | 1500 | 1800 | 2000 | Mass kg/m |
|---|---|---|---|---|---|---|---|---|---|---|---|---|---|---|---|---|
| SFH6 | 6 | -4/-12 | 2 | | 100 | | 400 | | | | | | | | | 0.20 |
| SFH8 | 8 | -5 | 3 | | | | | | 600 | | | | | | | 0.34 |
| SFH10 | 10 | -14 | 4 | | | 200 | | | | | 1000 | | | | | 0.52 |
| SFH12 | 12 | -6 -17 | 5 | | | | | | | | | | 1500 | | | 0.73 |
| SFH13 | 13 | | 6 | | | | | | | | | | | | | 0.82 |
| SFH16 | 16 | | 8 | | | | 300 | | | | | | | | 2000 | 1.18 |
| SFH20 | 20 | -7 -20 | 10 | | | | | | | | | | | | | 1.85 |
| SFH25 | 25 | | 15 | | | | | 400 | | | | | | | | 2.46 |
| SFH30 | 30 | | 16 | | | | | | | | | | | | | 3.97 |
| SFH35 | 35 | -9 -25 | 19 | | | | | | 500 | | | | | | | 5.32 |
| SFH40 | 40 | | 20 | | | | | | | | | | | | | 7.39 |
| SFH50 | 50 | | 26 | | | | | | | 600 | | | | | | 11.3 |

Material: high-carbon chromium bearing steel(SUJ2) hardness: HV697(60HRC) or more

## Stainless Fine Shaft (SSF & SSFH Type)

| Part Number | Outer Diameter D mm | Tolerance g6 μm | Length L mm 100 | 200 | 300 | 400 | 500 | 600 | 800 | 1000 | 1200 | 1500 | 1800 | 2000 | Mass kg/m |
|---|---|---|---|---|---|---|---|---|---|---|---|---|---|---|---|
| SSF6 | 6 | -4/-12 | 100 | | | | | 600 | | | | | | | 0.33 |
| SSF8 | 8 | -5 | | | | | | | 800 | | | | | | 0.39 |
| SSF10 | 10 | -14 | | 200 | | | | | | 1000 | | | | | 0.61 |
| SSF12 | 12 | -6 -17 | | | | | | | | | | 1500 | | | 0.88 |
| SSF13 | 13 | | | | | | | | | | | | | | 1.03 |
| SSF16 | 16 | | | | 300 | | | | | | | | | 2000 | 1.56 |
| SSF20 | 20 | -7 -20 | | | | | | | | | | | | | 2.43 |
| SSF25 | 25 | | | | | 400 | | | | | | | | | 3.80 |
| SSF30 | 30 | | | | | | | | | | | | | | 5.48 |
| SSF35 | 35 | -9 -25 | | | | | 500 | | | | | | | | 7.23 |
| SSF40 | 40 | | | | | | | | | | | | | | 9.44 |
| Ssf50 | 50 | | | | | | | 600 | | | | | | | 15.2 |

Material: Matensite stainless steel(equivalent to SUS 440C)
hardness: HV653(58HRC) or more, HV613(56HRC) or more for φ3-6

# SFU/DFU (Ball screw)

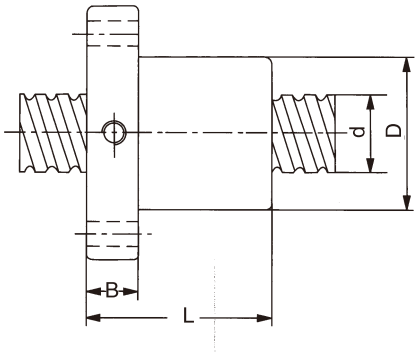


| MOODEL NO . | MAIN DIMENSIONS | | | | | Mounting dimension | | | | | | | | BASIC LOAD RATING | | RIGIDITY (kgf/um) |
|---|---|---|---|---|---|---|---|---|---|---|---|---|---|---|---|---|
| | SCREW DIAMTER | THREAD DISTANCE | BALL DIAMETER | NUT OUTER DIAMETER | BALL CIRCULATION Number | | | | | | | | | C(kgf) | Co(kgf) | |
| | d | s | Da | D | n | Q | A | G | H | L | B | W | d1 | | | K |
| **SFU1605-4** | 16 | 5 | 3.175 | 28 | 4 | M6 | 48 | 44 | 40 | 50 | 10 | 38 | 5.5 | 780 | 1790 | 20 |
| **SFU2005-4** | 20 | 5 | 3.175 | 36 | 4 | M6 | 58 | 51 | 44 | 51 | 10 | 47 | 6.6 | 1130 | 2380 | 25 |
| **SFU1505-4** | 25 | 5 | 3.175 | 40 | 4 | M8 | 62 | 55 | 48 | 51 | 10 | 51 | 6.6 | 1280 | 3110 | 35 |
| **SFU3205-4** | 32 | 5 | 3.175 | 50 | 4 | M8 | 80 | 71 | 62 | 52 | 12 | 65 | 9 | 1450 | 4150 | 40 |
| **SFU3210-4** | | 10 | 6.35 | 50 | 4 | M8 | 80 | 71 | 62 | 90 | 12 | 65 | 9 | 3390 | 7170 | 40 |
| **SFU4005-4** | 40 | 5 | 3.175 | 63 | 4 | M8 | 93 | 81.5 | 70 | 55 | 14 | 78 | 9 | 1610 | 5330 | 49 |
| **SFU4010-4** | | 10 | 6.35 | 63 | 4 | M8 | 93 | 81.5 | 70 | 93 | 14 | 78 | 9 | 3910 | 9520 | 50 |
| **SFU5010-4** | 50 | 10 | 6.35 | 75 | 4 | M8 | 110 | 97.5 | 85 | 93 | 16 | 93 | 11 | 4450 | 12500 | 65 |
| **SFU6310-4** | 63 | 10 | 6.35 | 90 | 4 | M8 | 125 | 100 | 95 | 98 | 18 | 108 | 11 | 5070 | 16600 | 80 |
| **SFU8010-4** | 80 | 10 | 6.35 | 105 | 4 | M8 | 145 | 127.5 | 110 | 98 | 20 | 125 | 13.5 | 5620 | 21300 | 90 |

**S** **FU** **20** **05** **–4**

S–Single nut
D–Double nut

No entry–circle nut
F–Flange nut

Ball circulation number

Thread distance

Screw diameter

台灣總代理

聯誠軸承有限公司

地址:104 台北市中山區新生北路三段10號1樓
電話:02-2585-5281
傳真:02-2585-5324
網址:http://www.lcbearing.com.tw
郵件:service@lcbearing.com.tw
lcb707@yahoo.com.tw

BRITISH VIRGIN ISLAND
CLCi LIMITED CORP.